About the Session Author

- Allen C Smith has been using the NI platform to solve complex engineering challenges for over 26 years.
- He is a Certified LabVIEW Architect, Certified Embedded Developer, Certified TestStand Developer, and LabVIEW Champion.
- He has been an Alliance Partner, worked for Alliance Partners, and served as a Systems Engineer with National Instruments. He is once again an Alliance Partner, offering services as a consulting software architect and engineer.
- While at NI, he developed the software tool support and official training course for the Actor Framework. He remains an AF evangelist and active member of the AF community.

- Follow me at
  - linkedin.com/in/allencsmith
  - Allencsmith149.workfolio.com
  - justACS

NATIONAL INSTRUMENTS™

justACS is a proud sponsor of GDevCon!

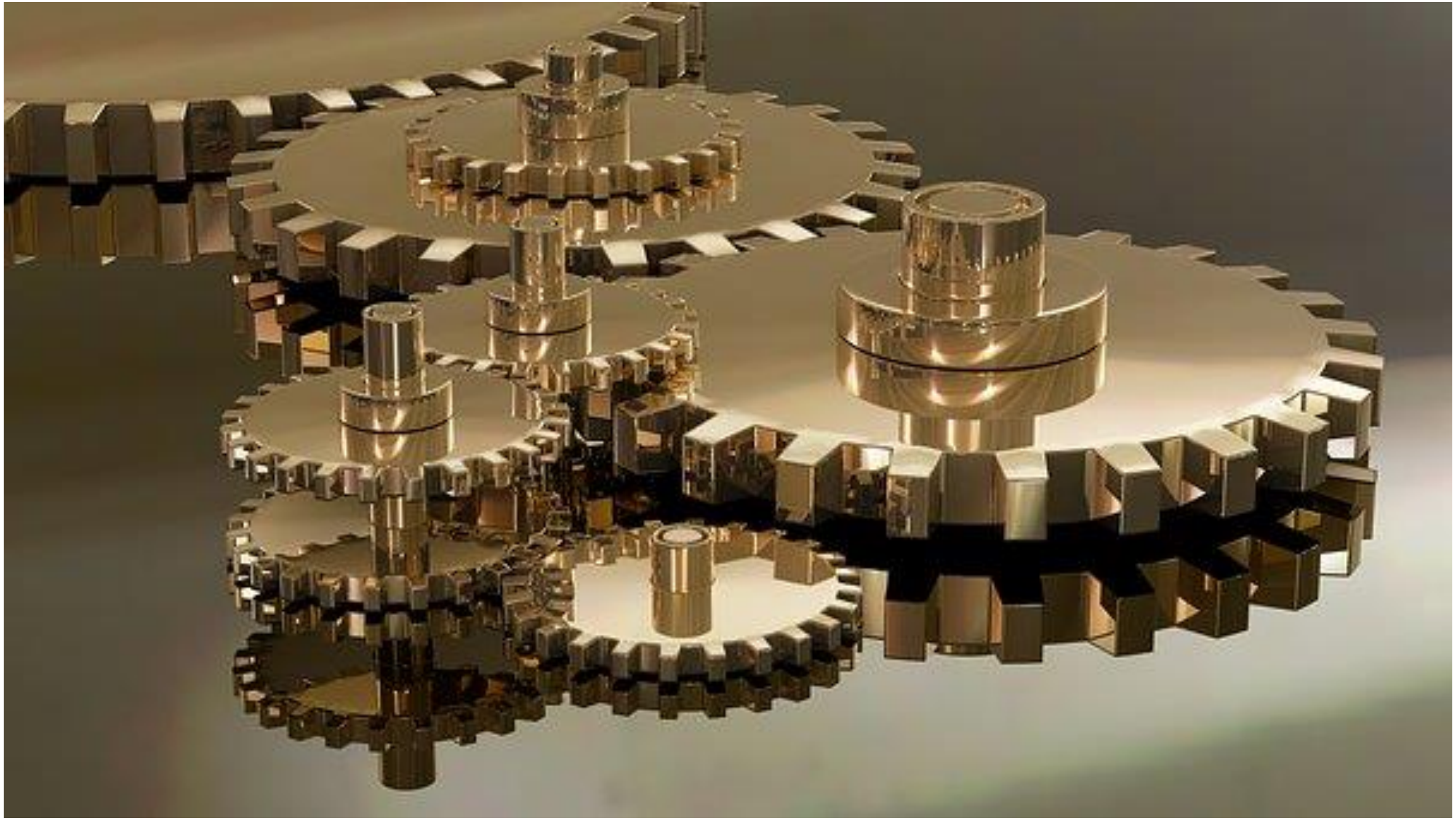

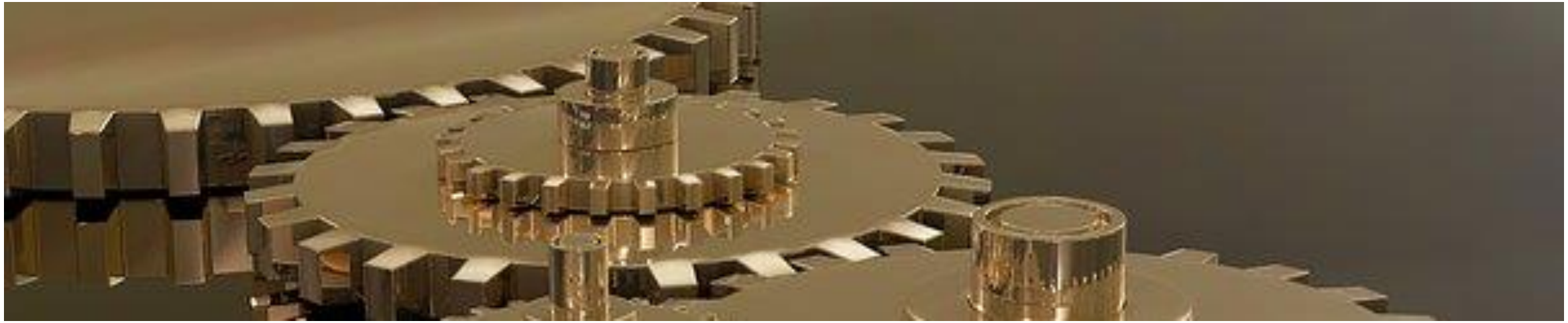

Test Driven Development in Actor Framework

Allen C Smith

CLA, CLED, CTD, CPI, LabVIEW Champion

JUSTACS.COM

Agenda

- Actor Framework – A Testing Challenge
- Isolating Actors
- Example – Testing a Simple Feature
  - Actor sends a message
  - Actor changes state
- A Cost Analysis

JUSTACS.COM

Agenda

- Actor Framework – A Testing Challenge
- Isolating Actors
- Example – Testing a Simple Feature
  - Actor sends a message
  - Actor changes state
- A Cost Analysis

JUSTACS.COM

Our Challenge: Go from this…

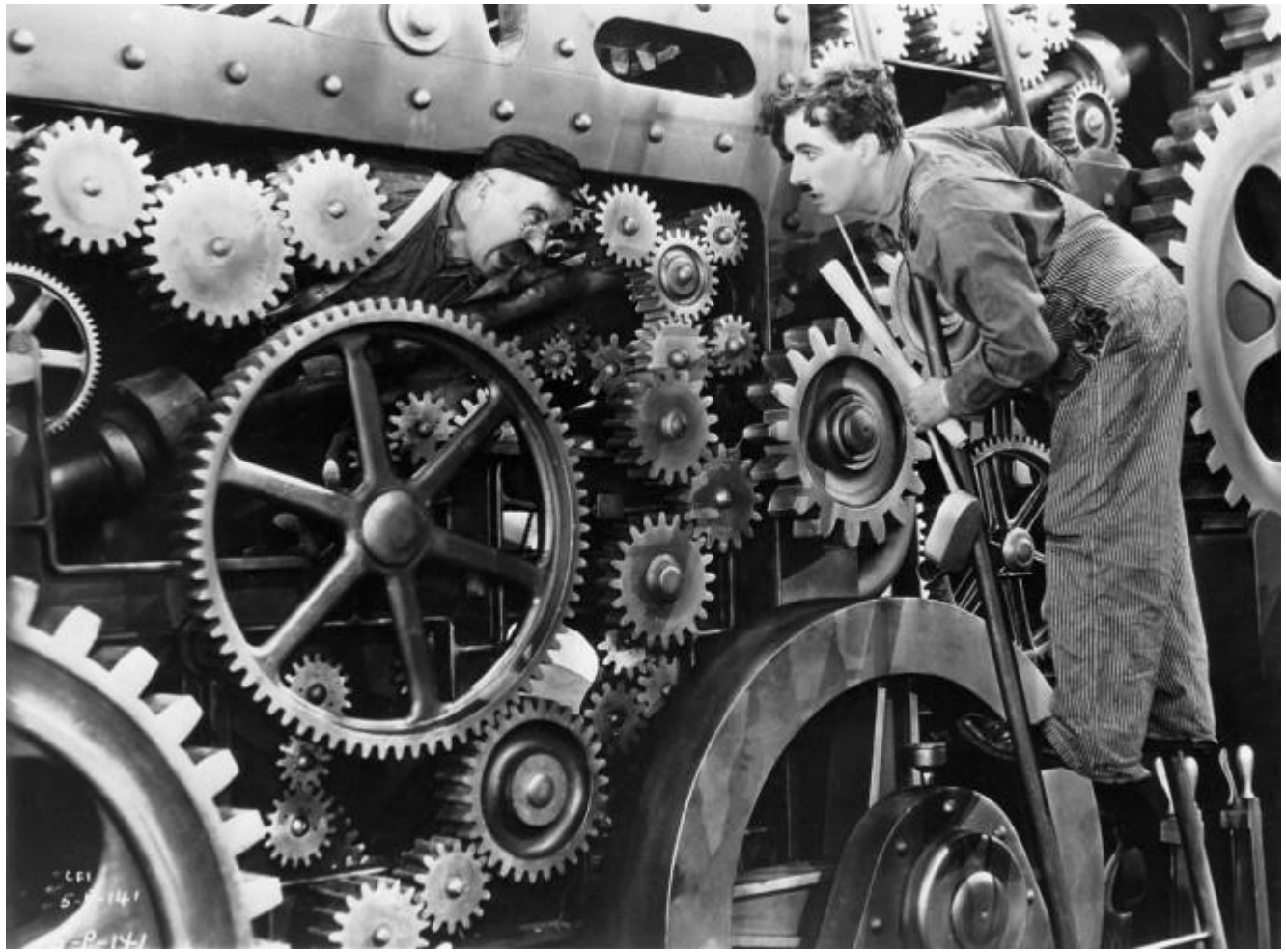

Seen at chucksblog.typepad.com

… to this

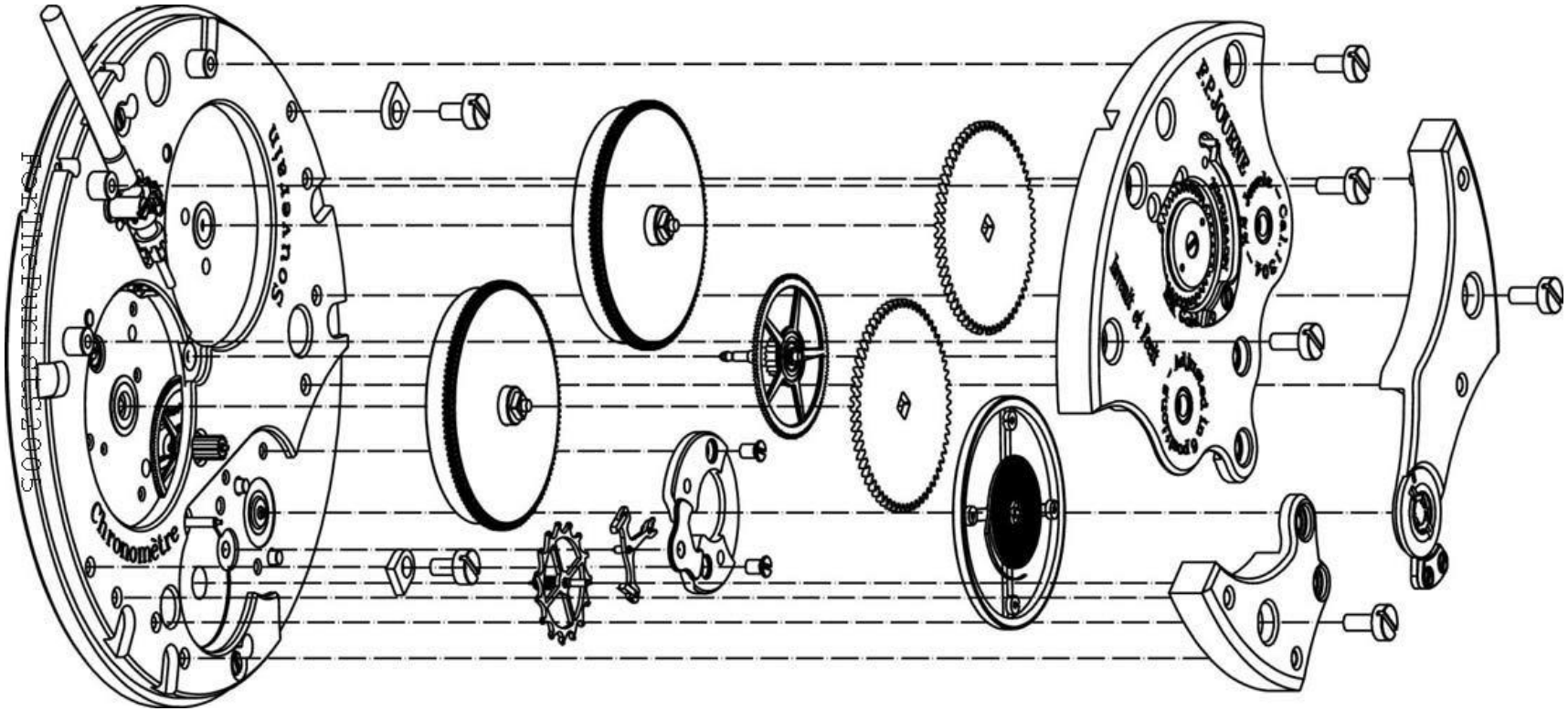

JUSTACS.COM

Test Actors Individually!

- Recommendations
  - Work with multiple small projects
  - Test code on the desktop where possible
  - Skip IDE deployments in favor of RT EXEs
    - Faster to

ni.com

Object	AF: Non-actor created Actor Cooler of type Simulated Cooler.lvclass
Object	AF: Non-actor sent Cooler.lvlib:Launch Interface Msg.lvclass to Actor Cooler
Object	AF: Actor Cooler created Actor Dual Fan of type Dual Fan.lvclass
Object	AF: Actor Dual Fan sent Timed Loop Controller.lvlib:Update Msg.lvclass to Actor Dual Fan
Object	AF: Actor Dual Fan received Timed Loop Controller.lvlib:Update Msg.lvclass
Object	AF: Actor Cooler created Actor Dual Pump of type Dual Pump.lvclass
Object	AF: Actor Cooler created Actor Water Level of type Water Level.lvclass
Object	AF: Actor Dual Pump sent Timed Loop Controller.lvlib:Update Msg.lvclass to Actor Dual Pump
Object	AF: Actor Cooler sent Timed Loop Controller.lvlib:Update Msg.lvclass to Actor Cooler
Object	AF: Actor Water Level sent Timed Loop Controller.lvlib:Update Msg.lvclass to Actor Water Level
Object	AF: Actor Dual Fan sent Timed Loop Controller.lvlib:Update Msg.lvclass to Actor Dual Fan
Object	AF: Actor Dual Pump sent Timed Loop Controller.lvlib:Update Msg.lvclass to Actor Dual Pump
Object	AF: Actor Cooler sent Timed Loop Controller.lvlib:Update Msg.lvclass to Actor Cooler
Object	AF: Actor Dual Fan received Timed Loop Controller.lvlib:Update Msg.lvclass
Object	AF: Actor Water Level sent Timed Loop Controller.lvlib:Update Msg.lvclass to Actor Water Level
Object	AF: Actor Dual Pump received Timed Loop Controller.lvlib:Update Msg.lvclass
Object	AF: Actor Cooler received Cooler.lvlib:Launch Interface Msg.lvclass

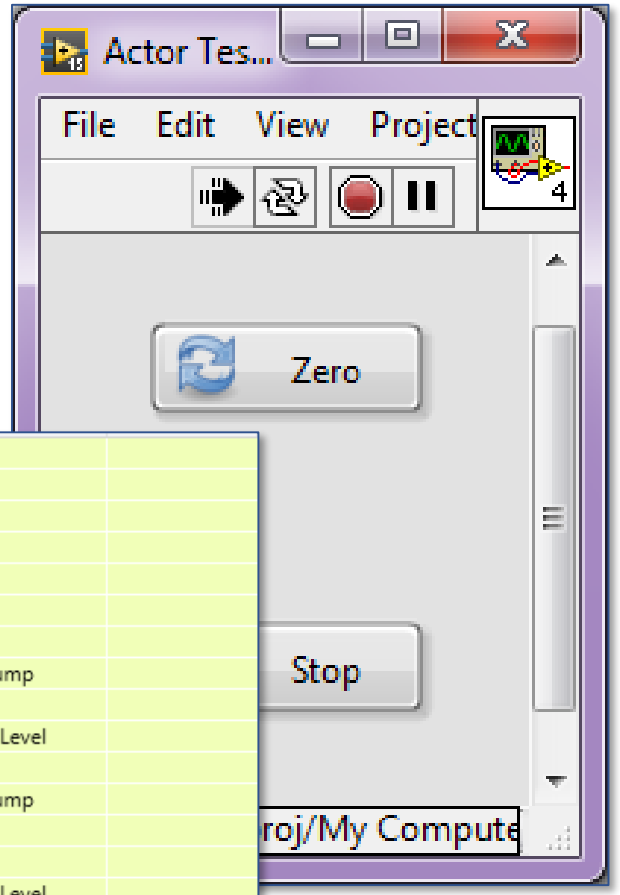

JUSTACS.COM

Test Driven Development: Work Flow

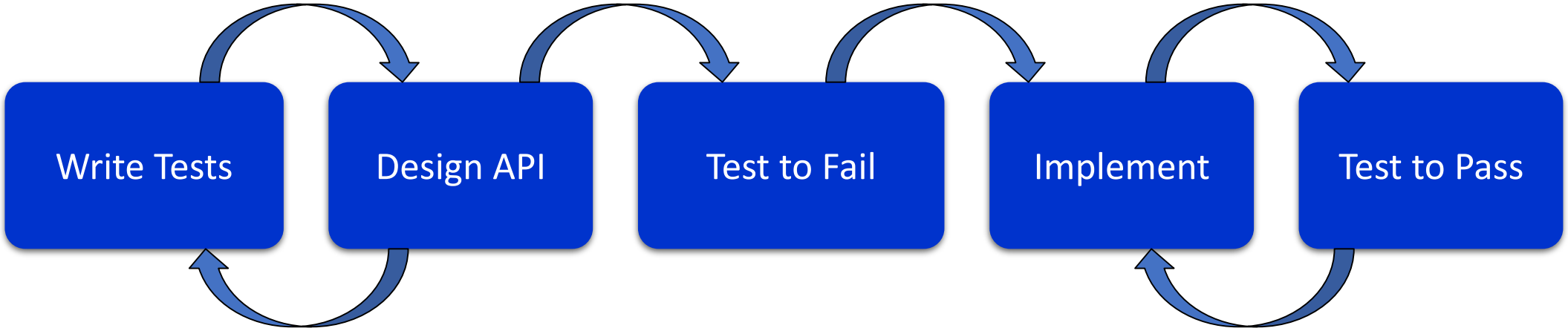

Agenda

- Actor Framework – A Testing Challenge
- Isolating Actors
- Example – Testing a Simple Feature
  - Actor sends a message
  - Actor changes state
- A Cost Analysis

JUSTACS.COM

Elements of the Actor Model

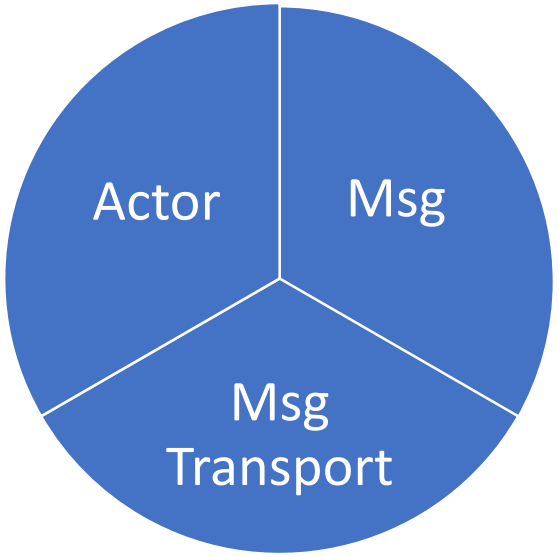

- **Actor**
  An encapsulation of data, behaviors, and threads
- **Message**
  A unit of information passed between actors
- **Message Transport**
  A mechanism to move messages to the destination

JUSTACS.COM

Elements of the Actor Model

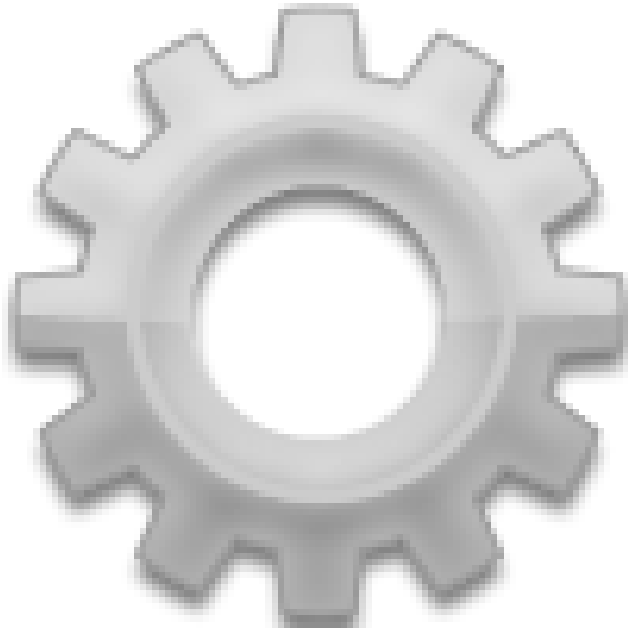

An Actor can:

- Send a message
- Launch an actor
- Change how it will respond to the next message it receives

JUSTACS.COM

Elements of the Actor Model

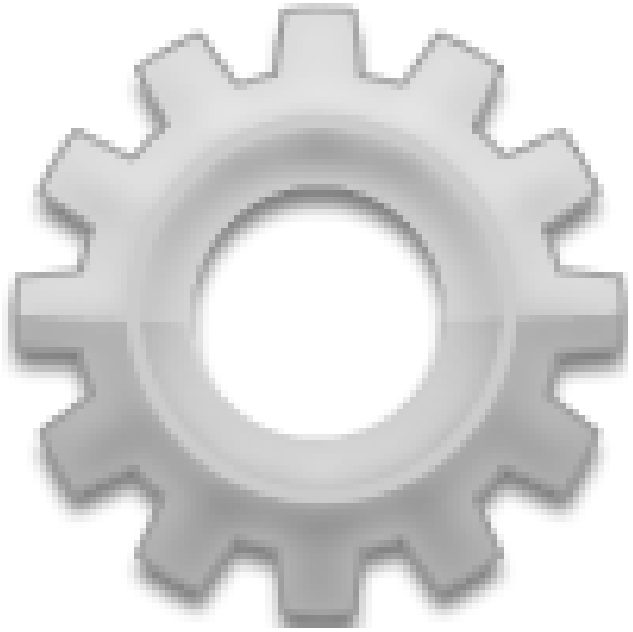

An Actor can:

- Send a message
- ~~Launch an actor~~
- Change how it will respond to the next message it receives

JUSTACS.COM

How to Test an Actor

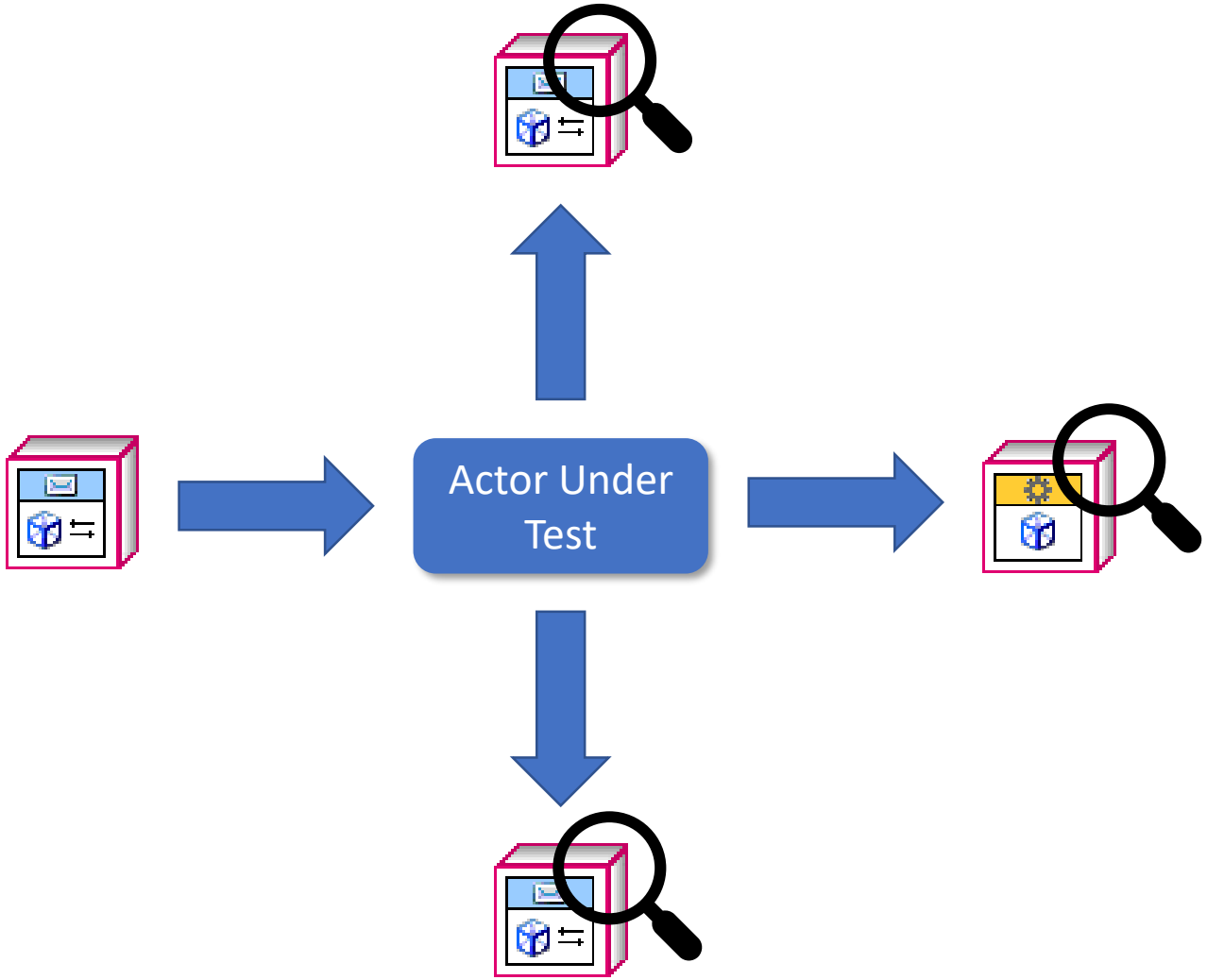

JUSTACS.COM

Send a message to the actor…

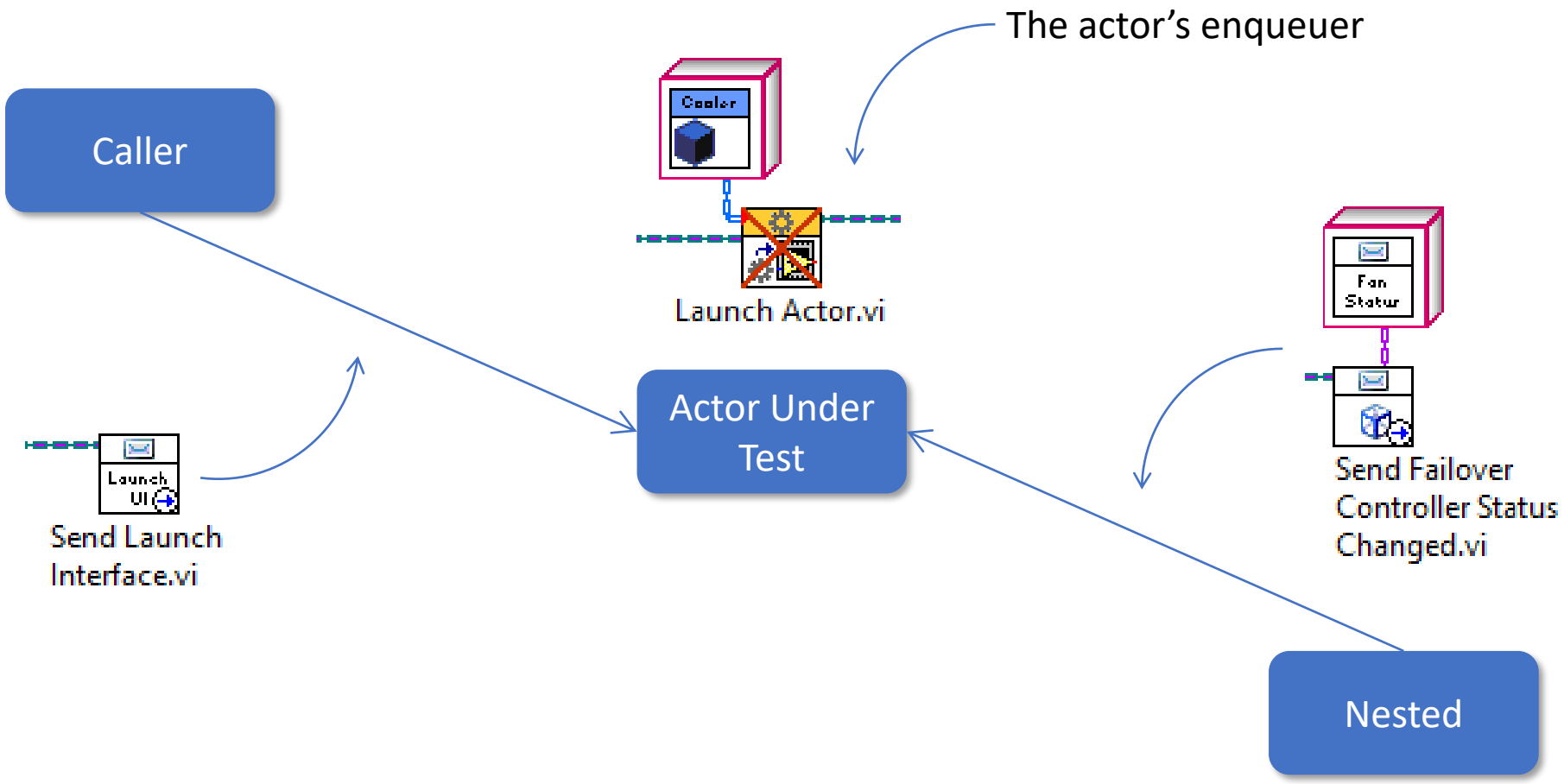

Receiving a message from the actor…

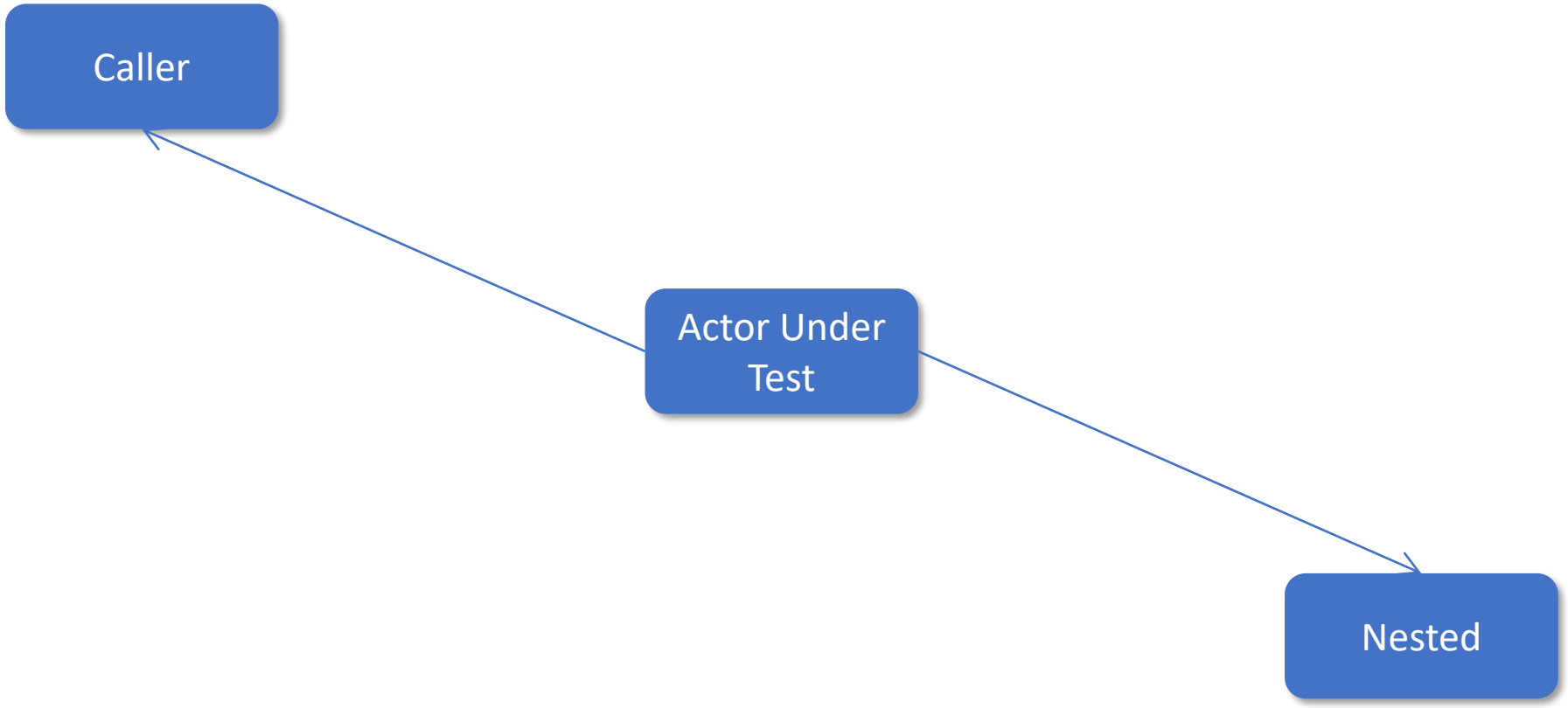

JUSTACS.COM

Receiving a message for the nested

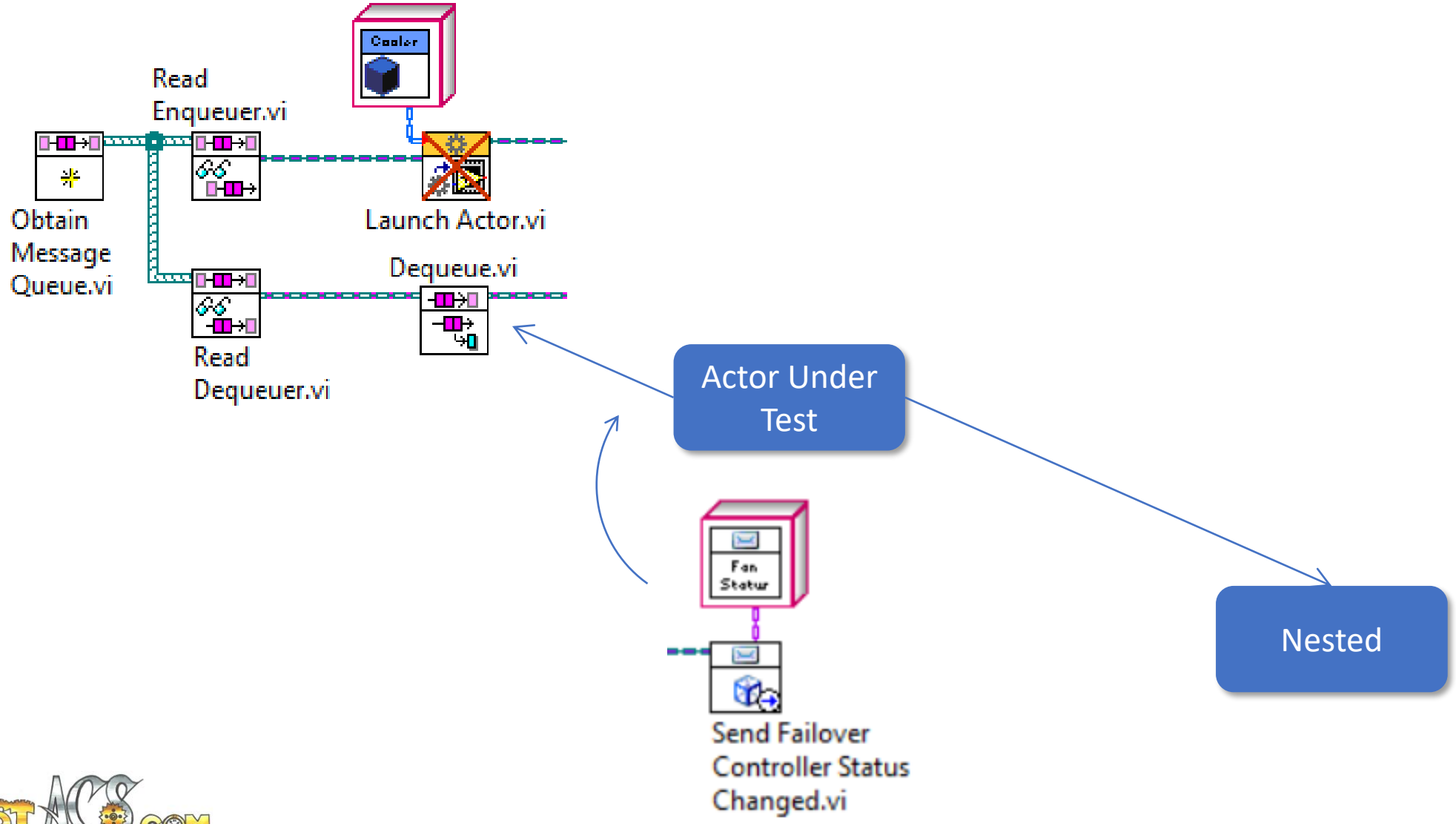

Receiving a message for the nested

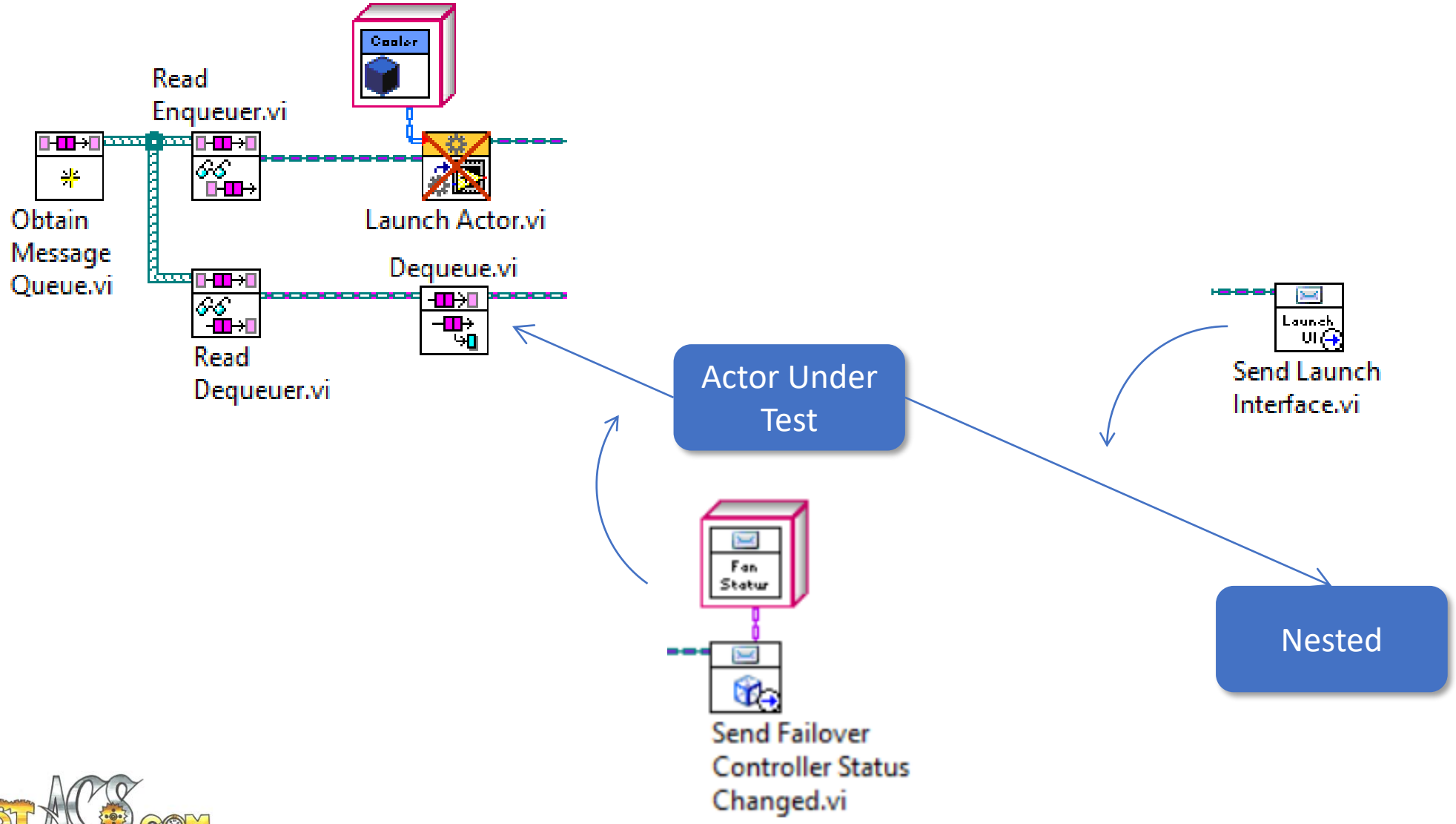

JUSTACS.COM

Receiving a message for the nested

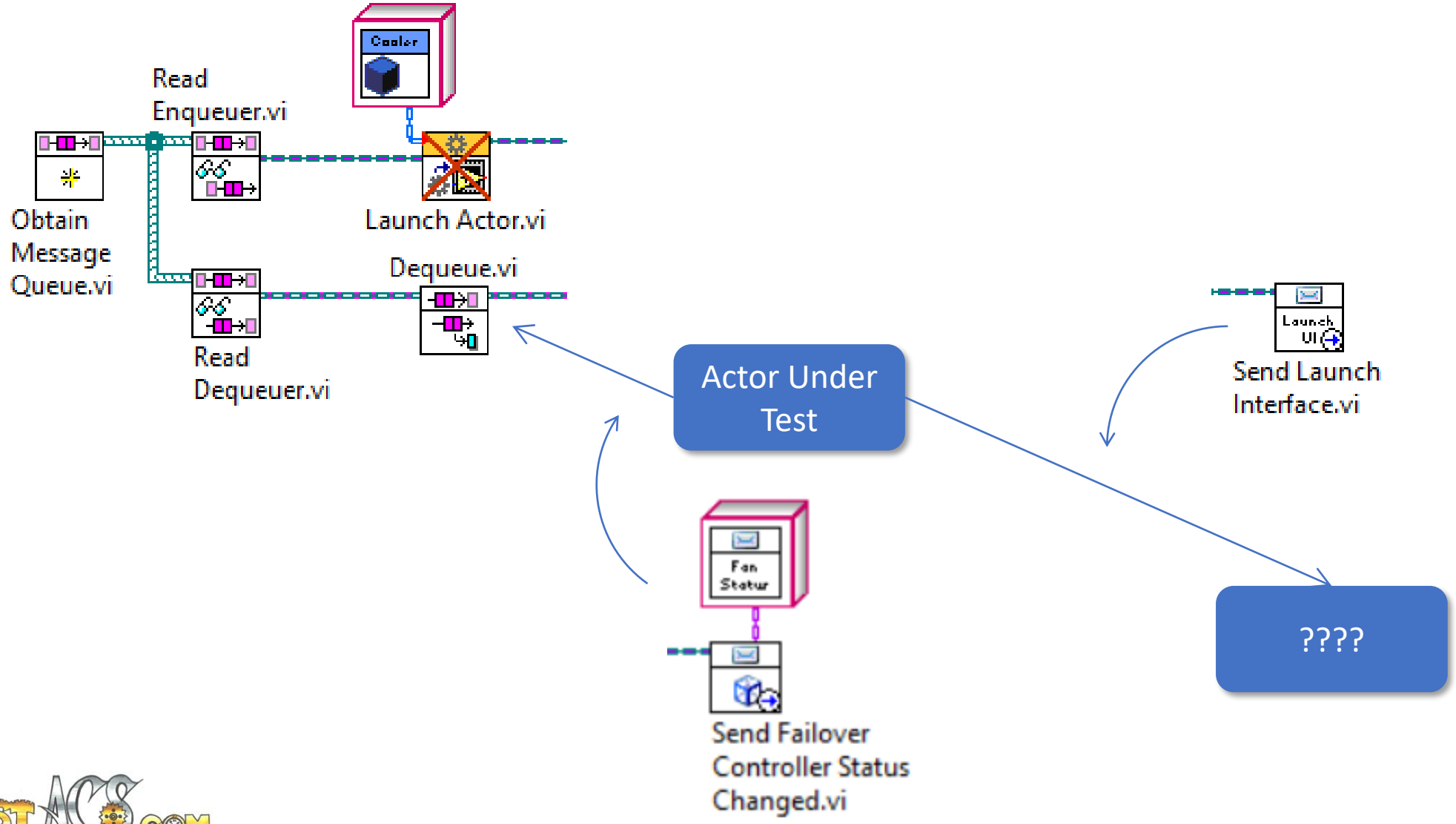

JUSTACS.COM

Receiving a message for the nested

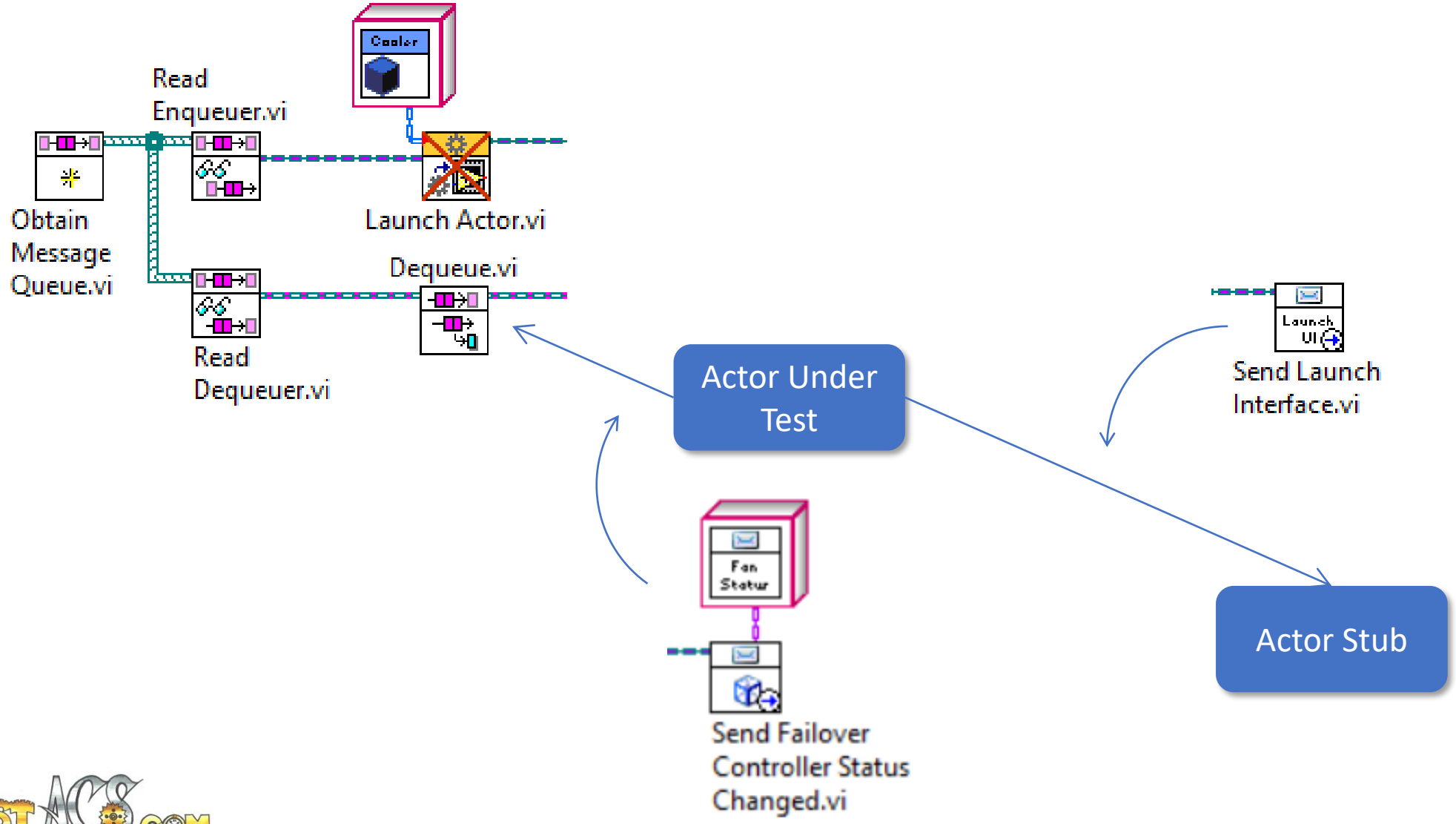

Actor Stubs

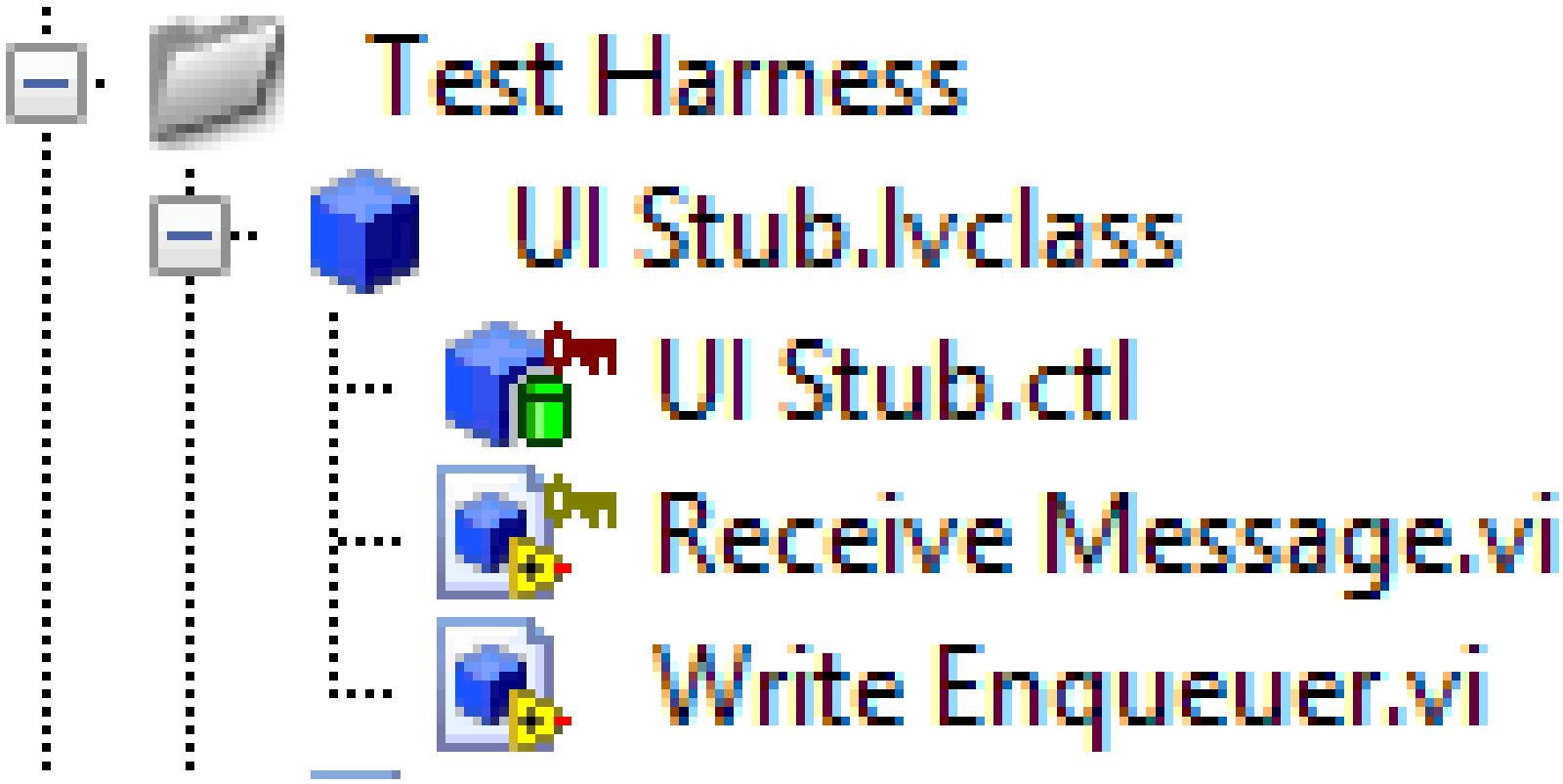

JUSTACS.COM

Actor Stubs – Override Receive Message.vi

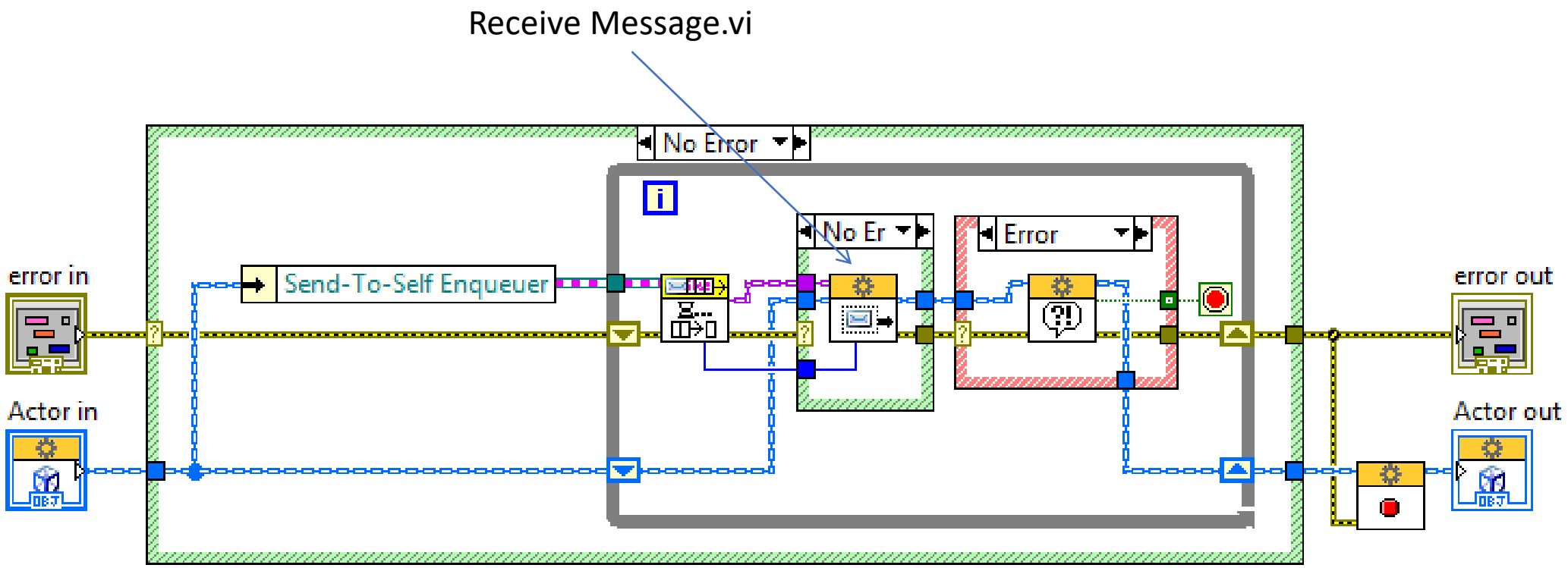

Actor:Actor Core

Actor Stubs – Override Receive Message.vi

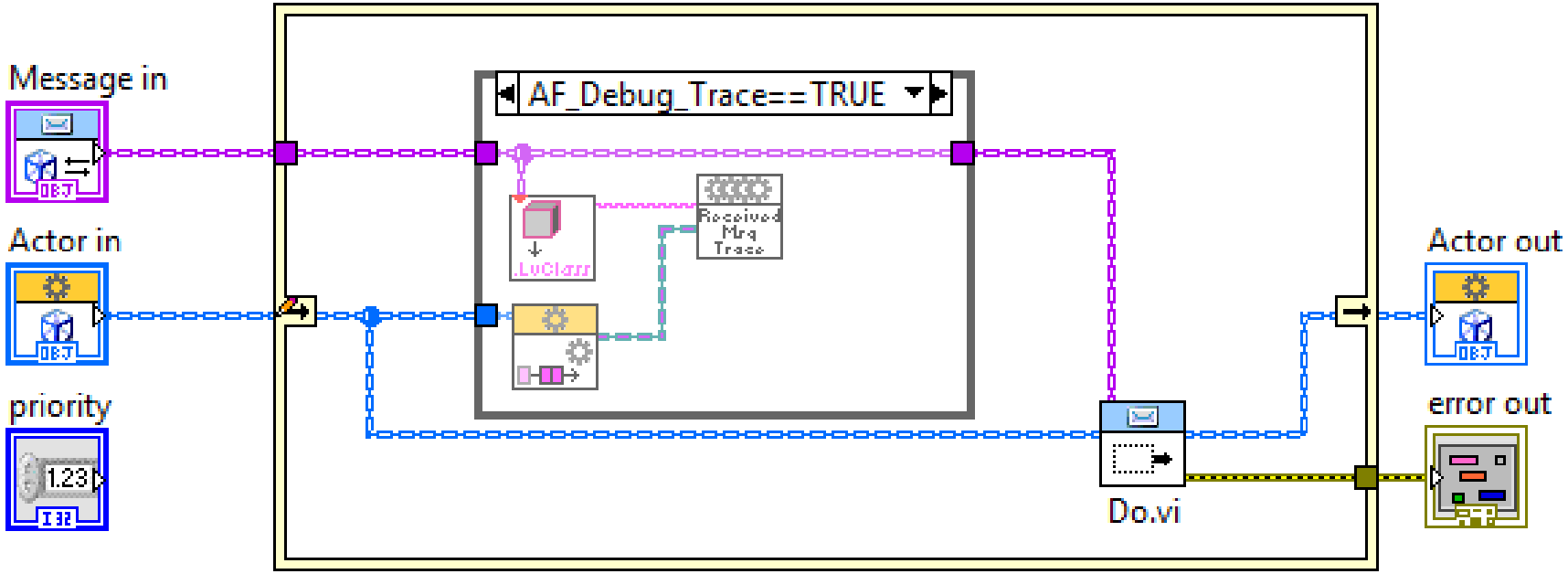

Actor Stubs – Override Receive Message.vi

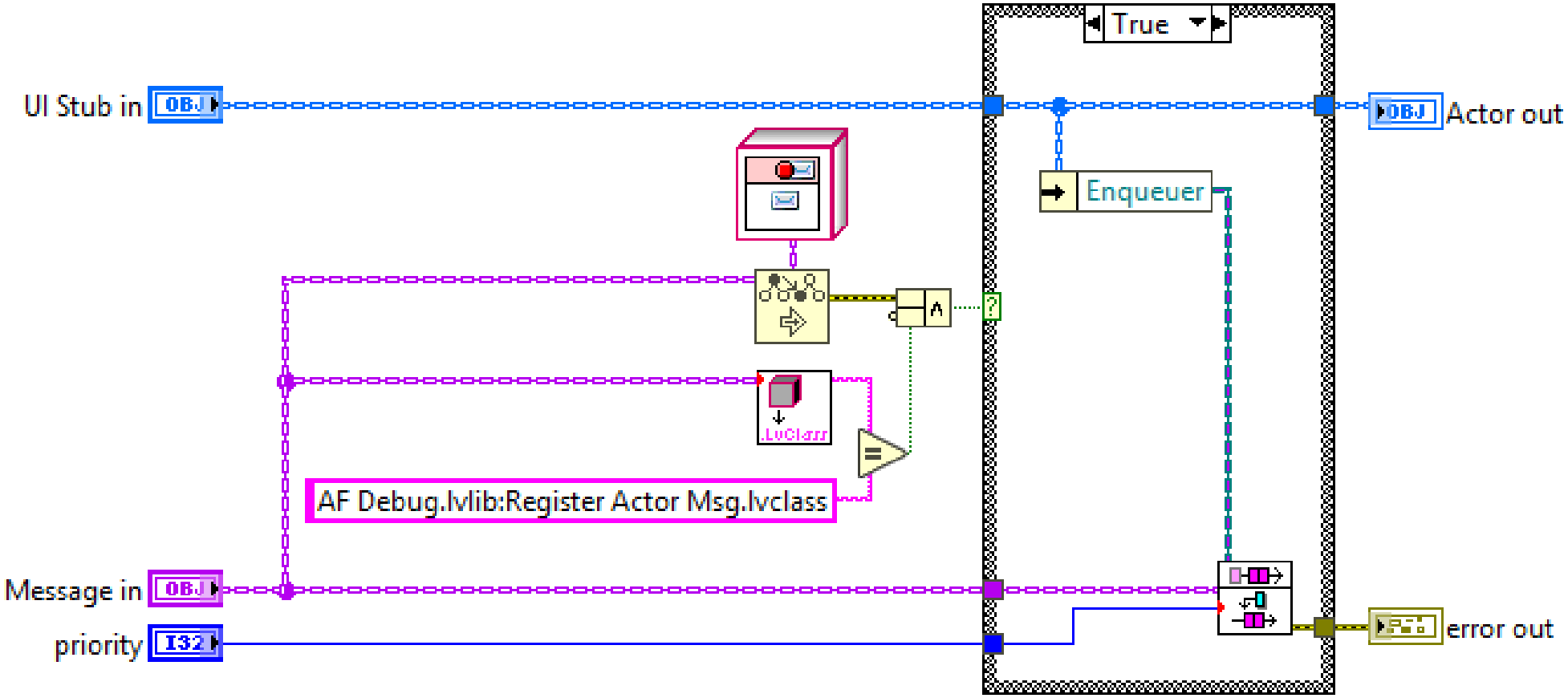

Interfaces/Low Coupling

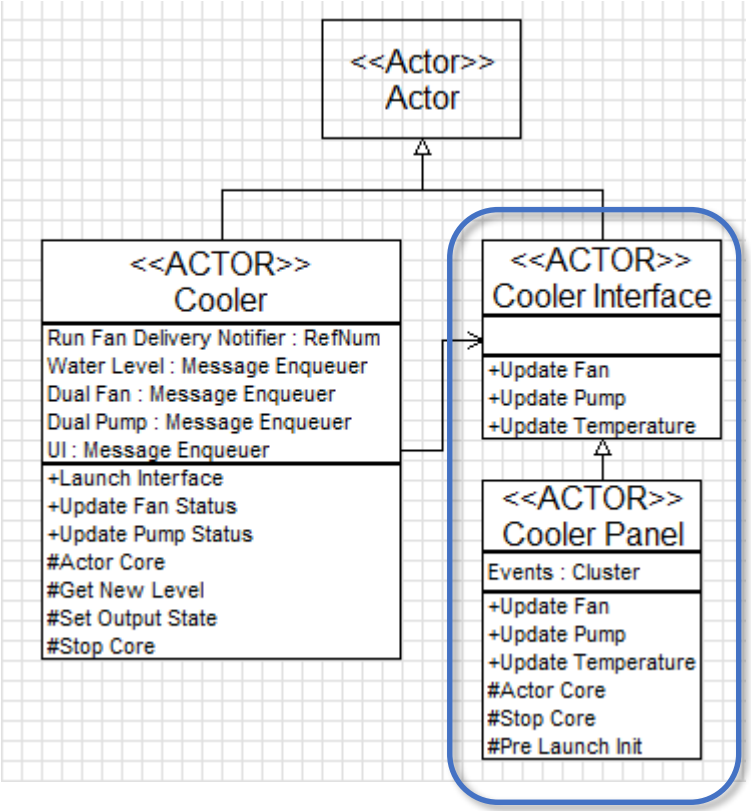

Abstract methods

Concrete Implementations

Dependency Injection

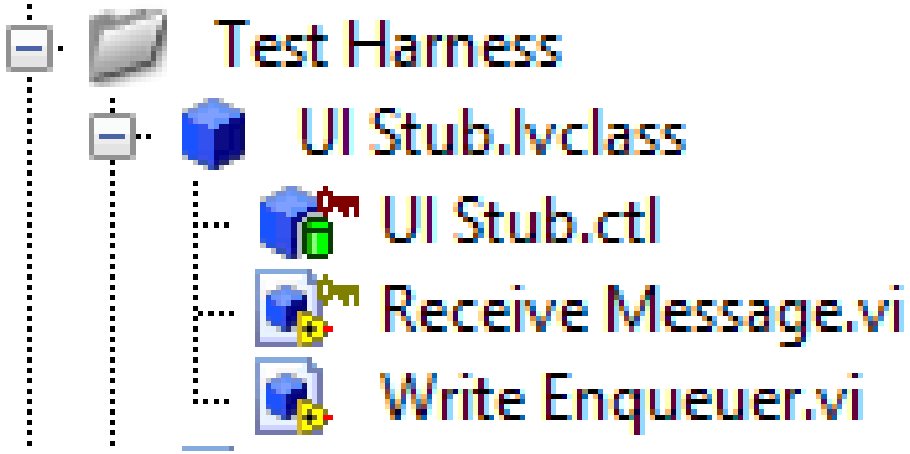

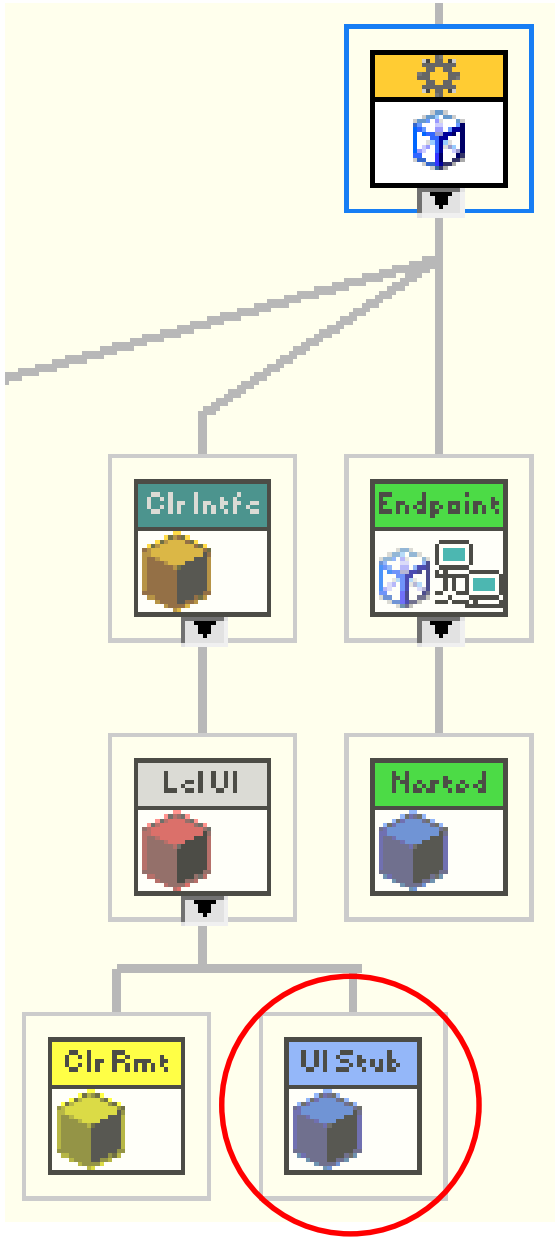

JUSTACS.COM

Agenda

- Actor Framework – A Testing Challenge
- Isolating Actors
- Example – Testing a Simple Feature
  - Actor sends a message
  - Actor changes state
- A Cost Analysis

JUSTACS.COM

Better for Classes

Our Actors

Network Endpoint Actors

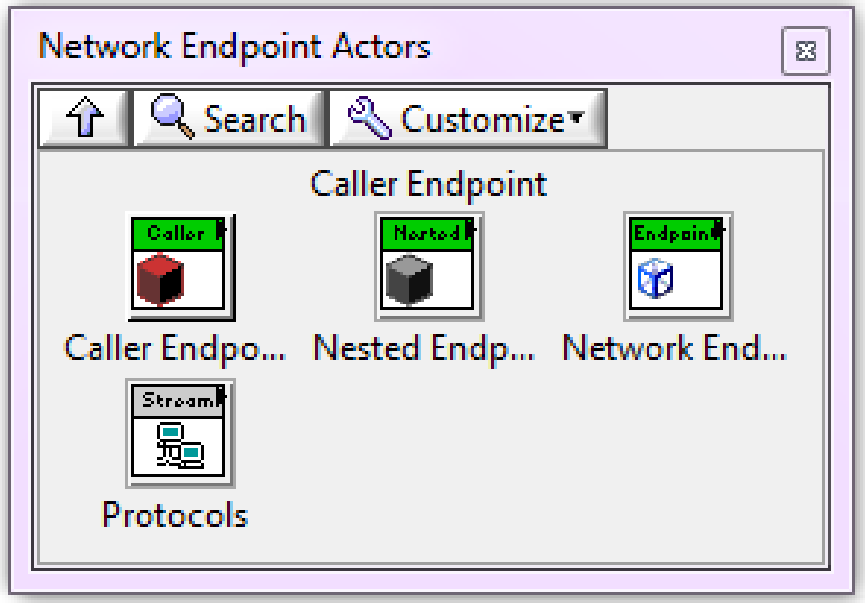

Evaporative Cooler (Course Project)

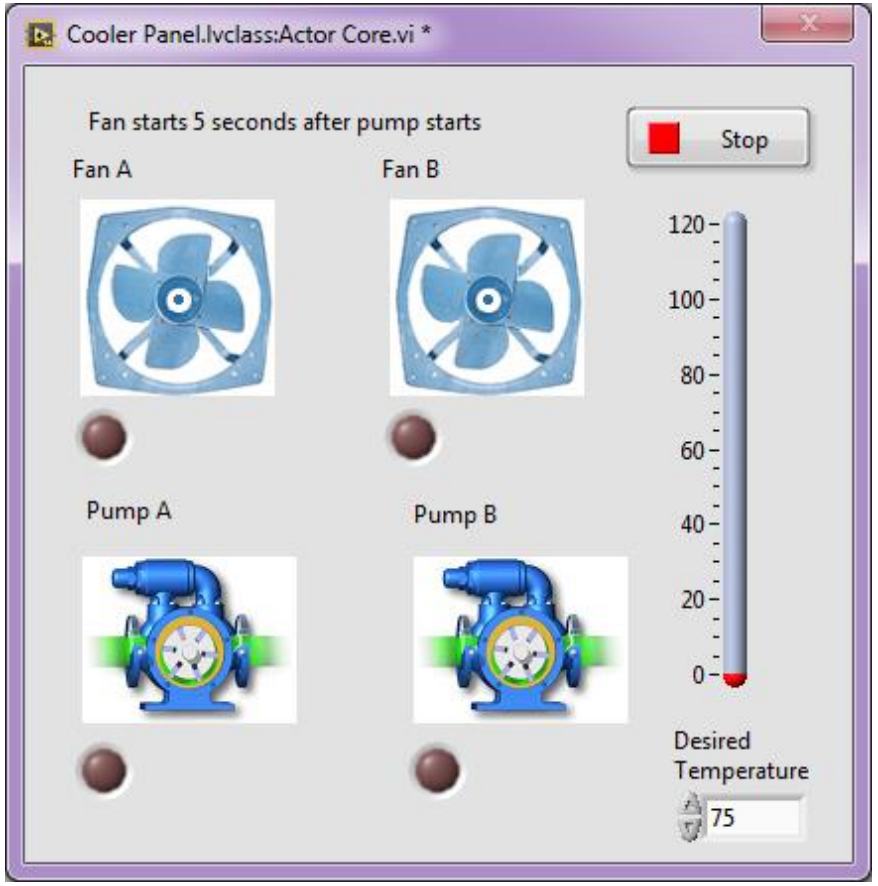

System Diagram

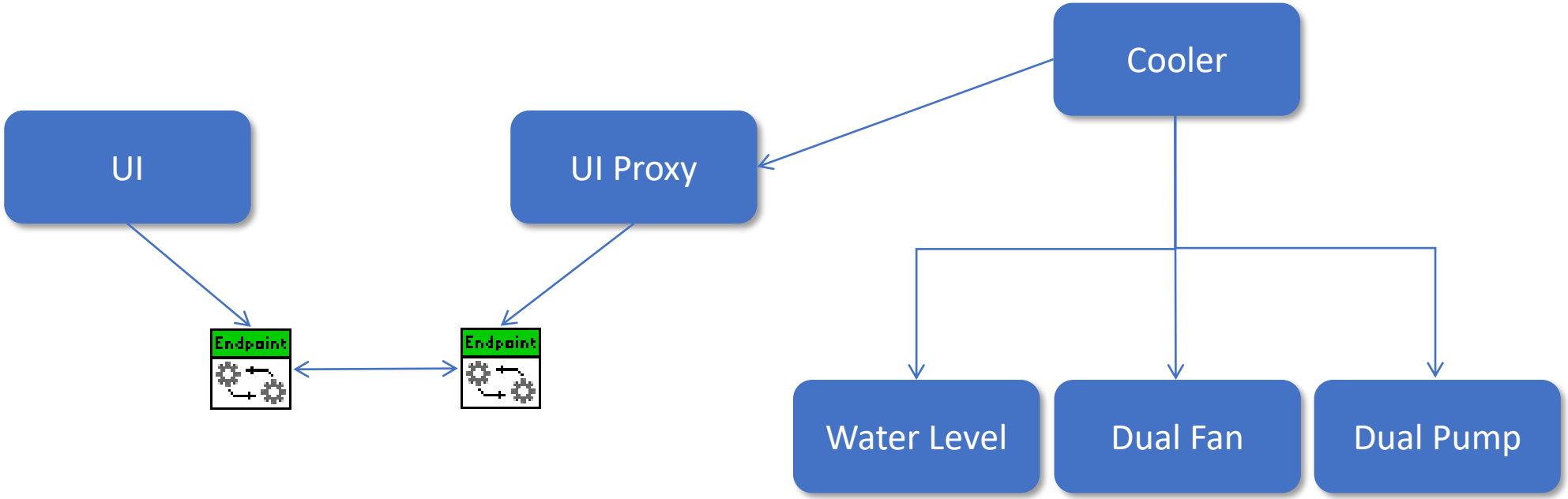

The Sequence Diagram

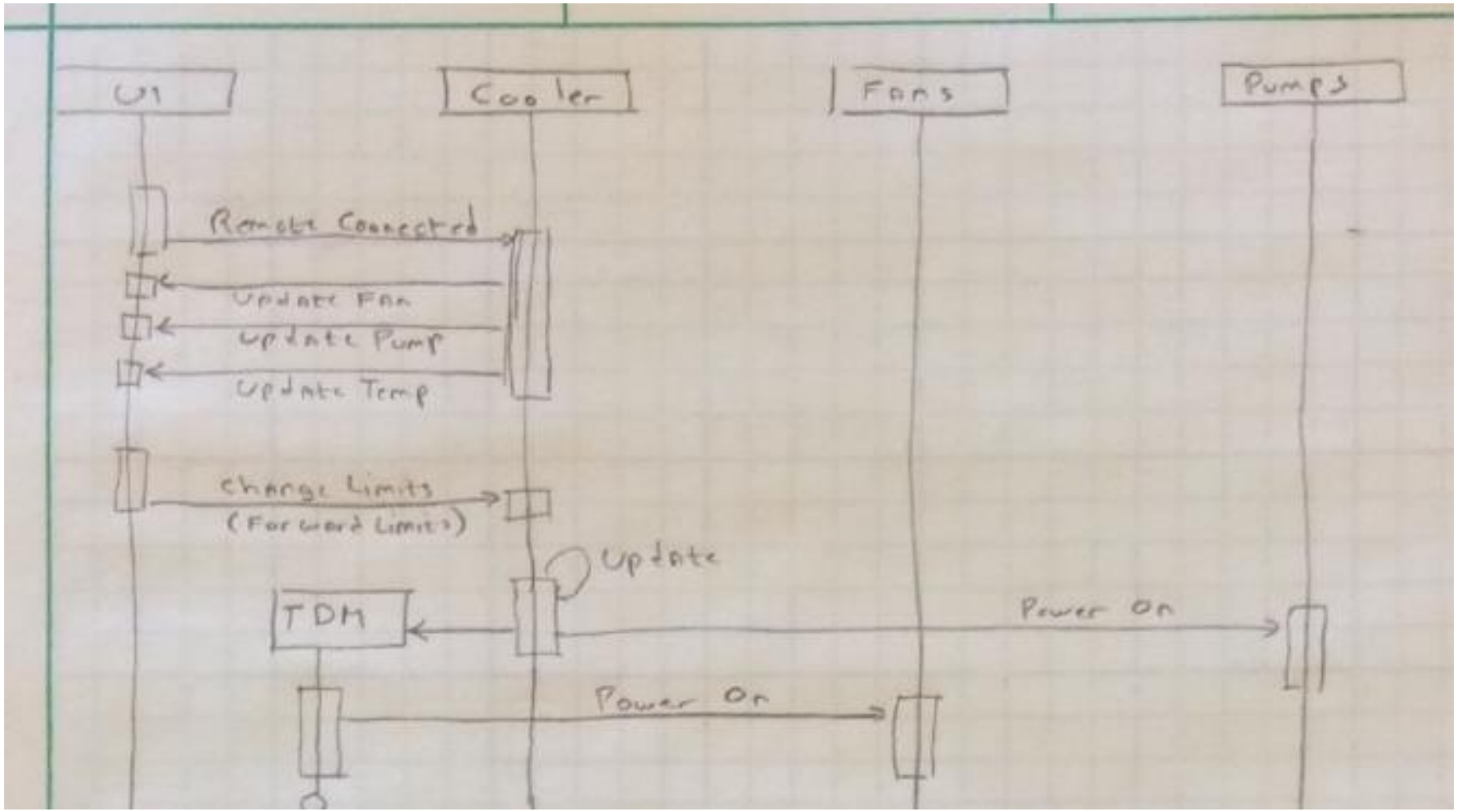

A Simple Feature

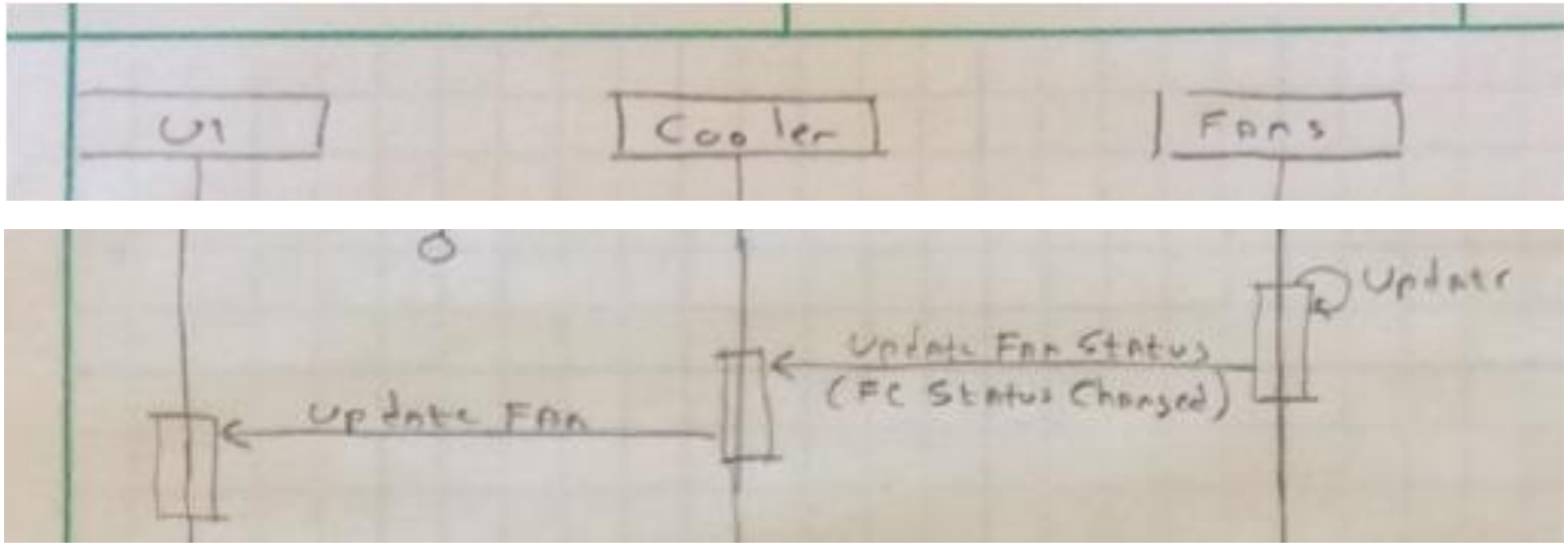

JUSTACS.COM

A Simple Feature, Part 1

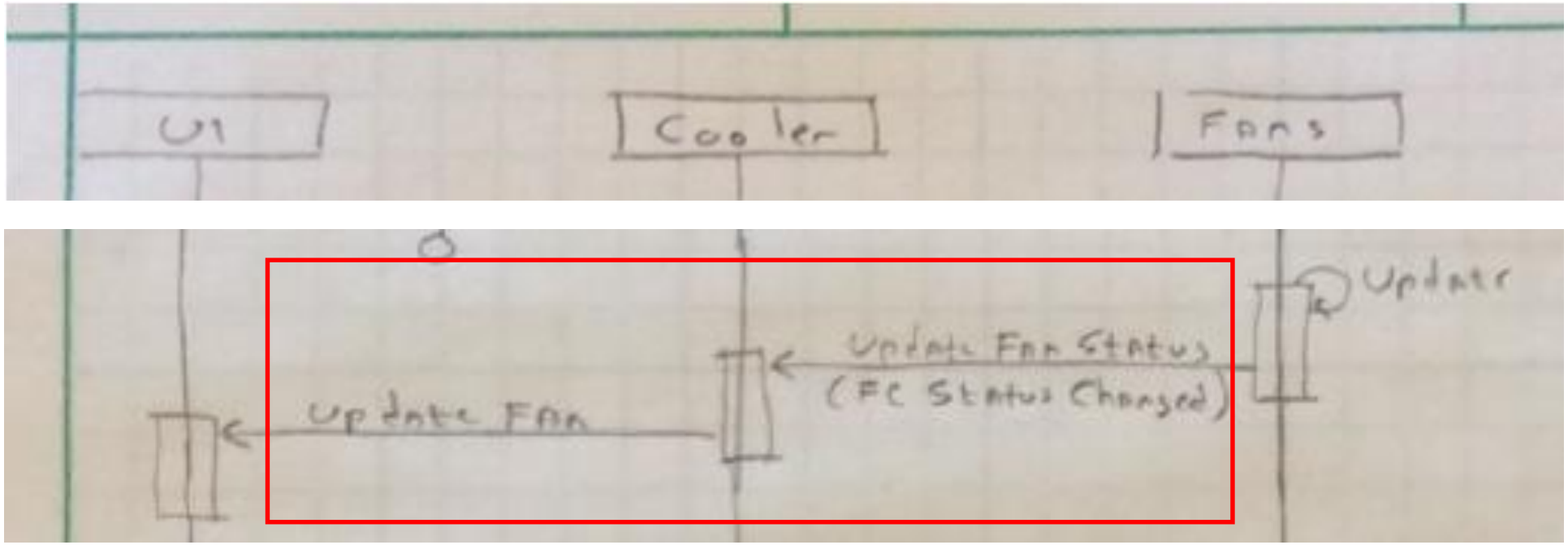

Agenda

- Actor Framework – A Testing Challenge
- Isolating Actors
- Example – Testing a Simple Feature
  - Actor sends a message
  - Actor changes state
- A Cost Analysis

JUSTACS.COM

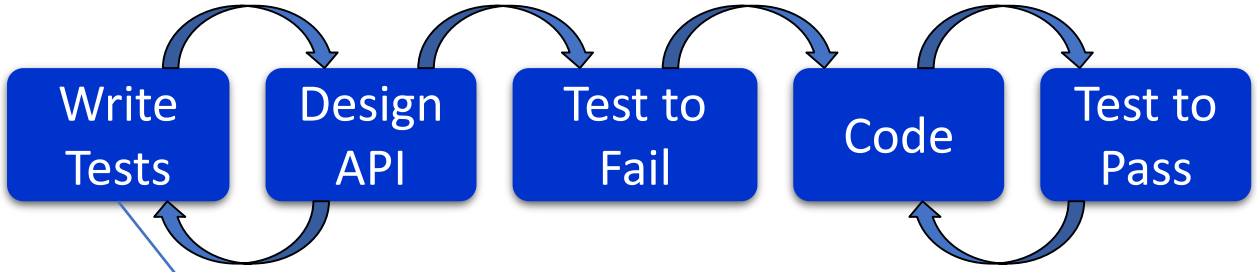
Write Tests
Design API
Test to Fail
Code
Test to Pass

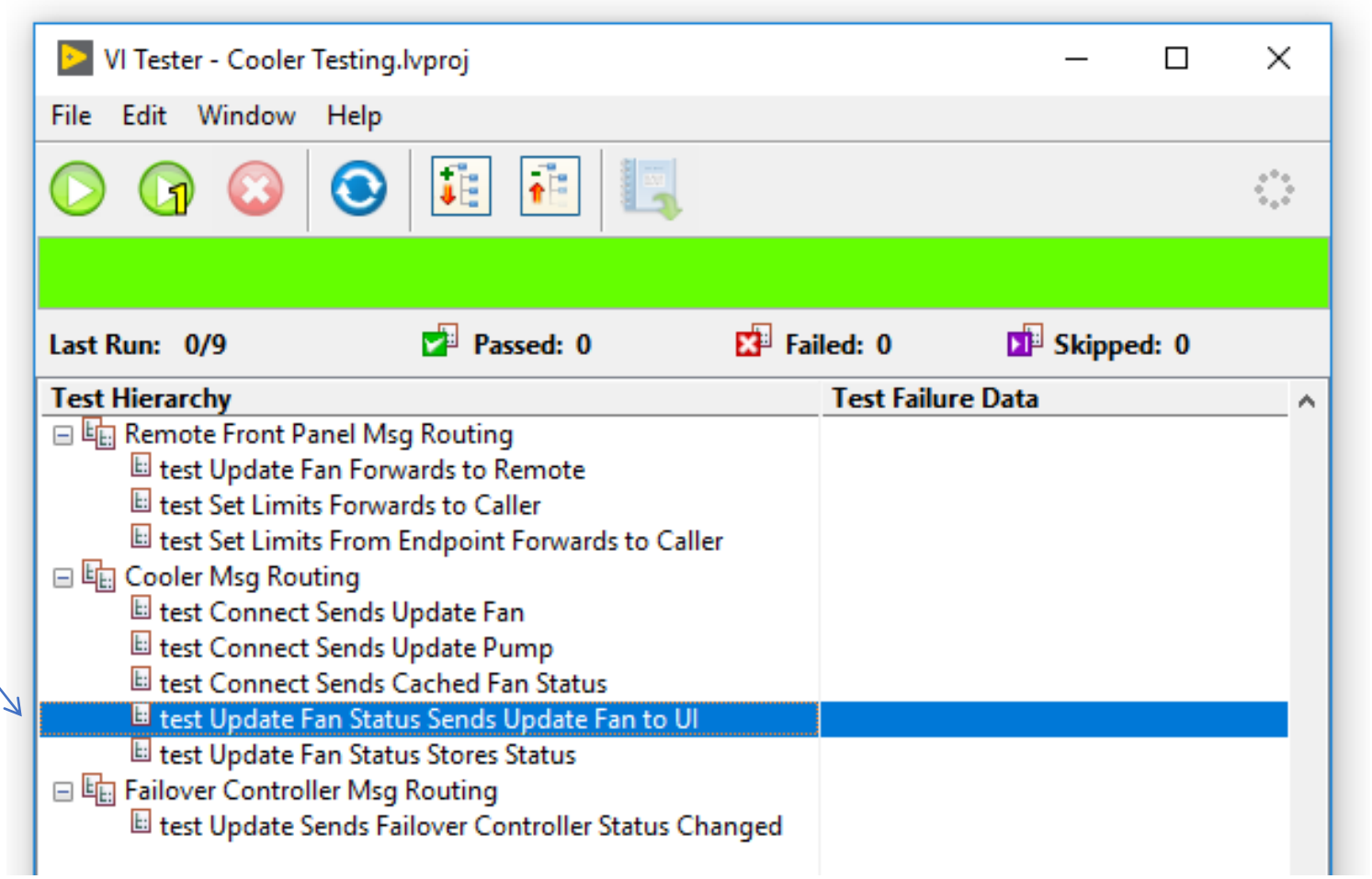
VI Tester - Cooler Testing.lvproj
File Edit Window Help
Last Run: 0/9
Passed: 0
Failed: 0
Skipped: 0
Test Hierarchy
Test Failure Data
Remote Front Panel Msg Routing
test Update Fan Forwards to Remote
test Set Limits Forwards to Caller
test Set Limits From Endpoint Forwards to Caller
Cooler Msg Routing
test Connect Sends Update Fan
test Connect Sends Update Pump
test Connect Sends Cached Fan Status
test Update Fan Status Sends Update Fan to UI
test Update Fan Status Stores Status
Failover Controller Msg Routing
test Update Sends Failover Controller Status Changed

JUSTACS.COM

A VI Tester Test Case

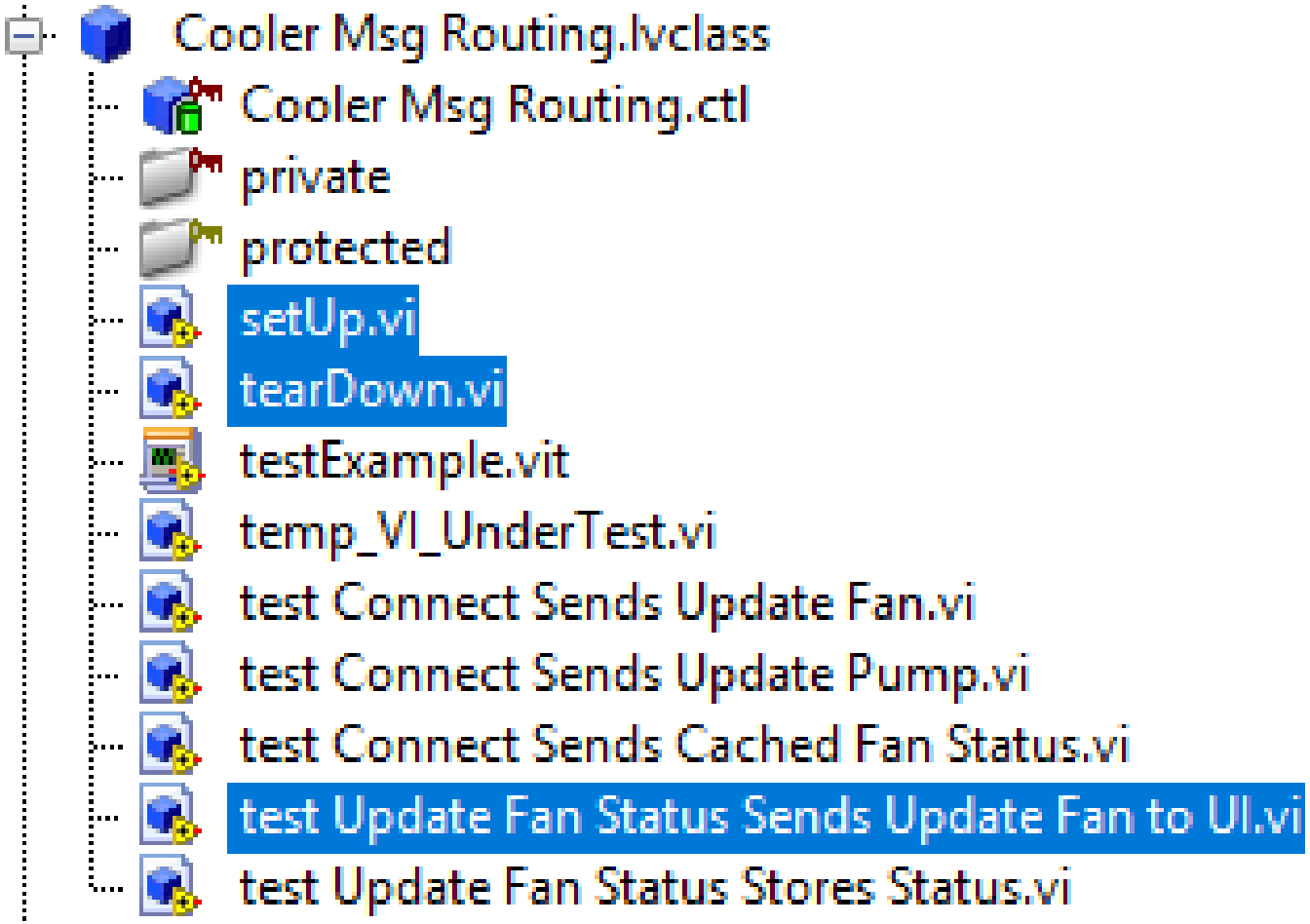

Setup

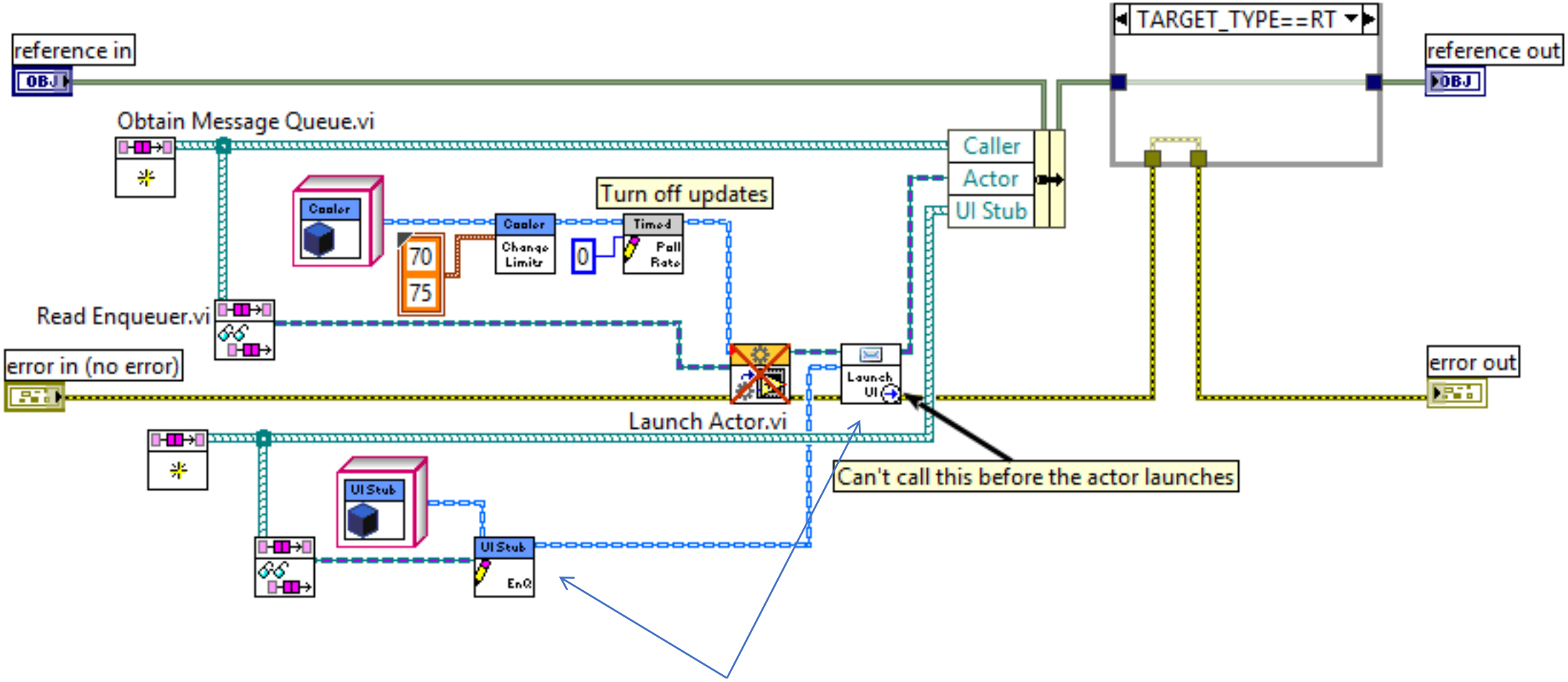

Dependency injection

The Unit Test

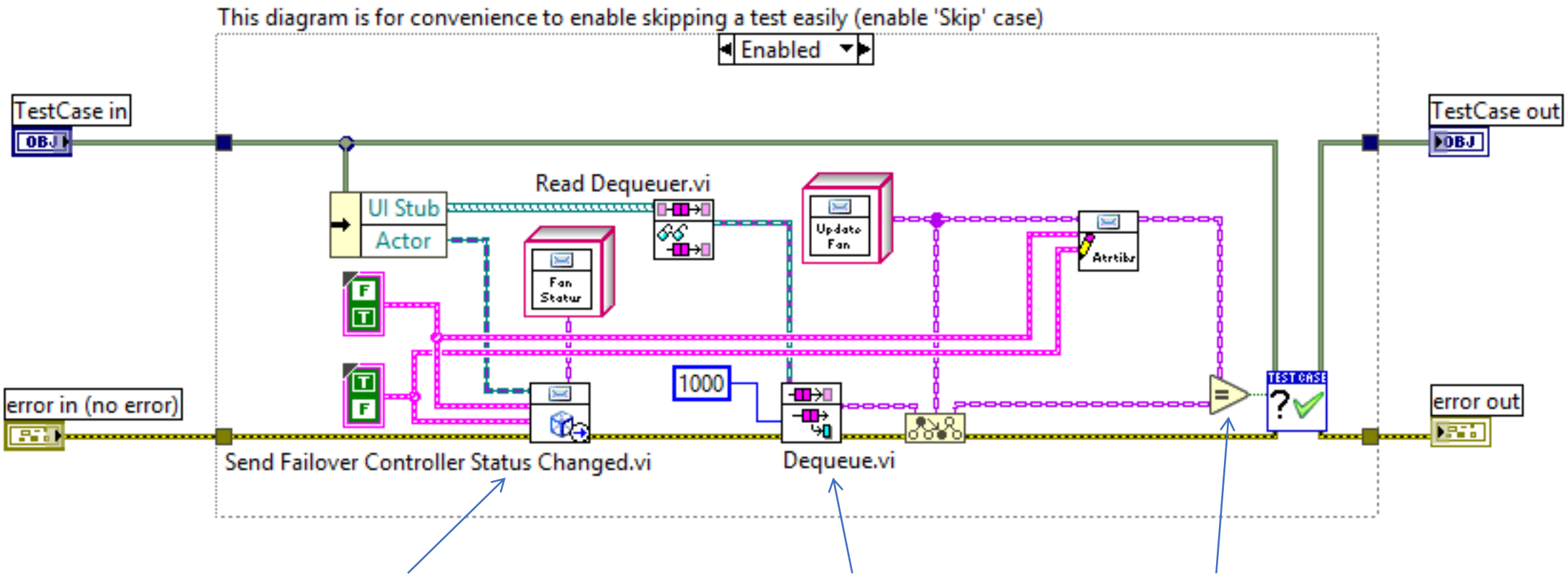

Send the (abstract) message

Receive the response

Evaluate

Tip: Dequeue Timeout

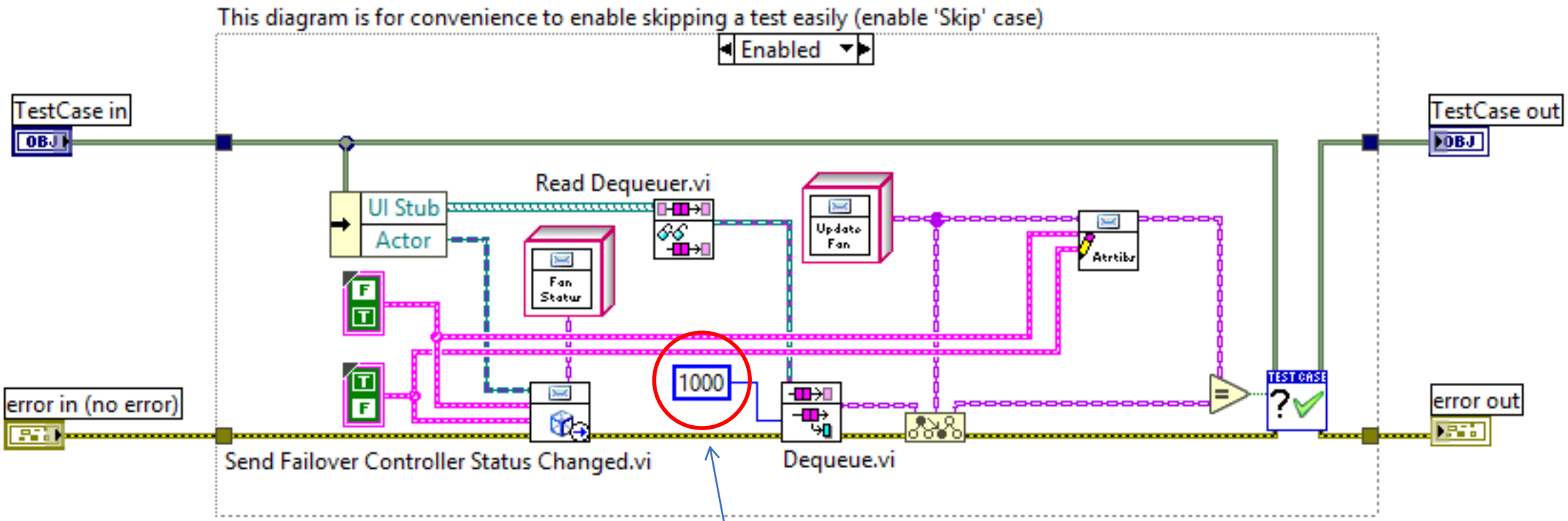

Set a timeout here!

Tip: Cast to More Specific

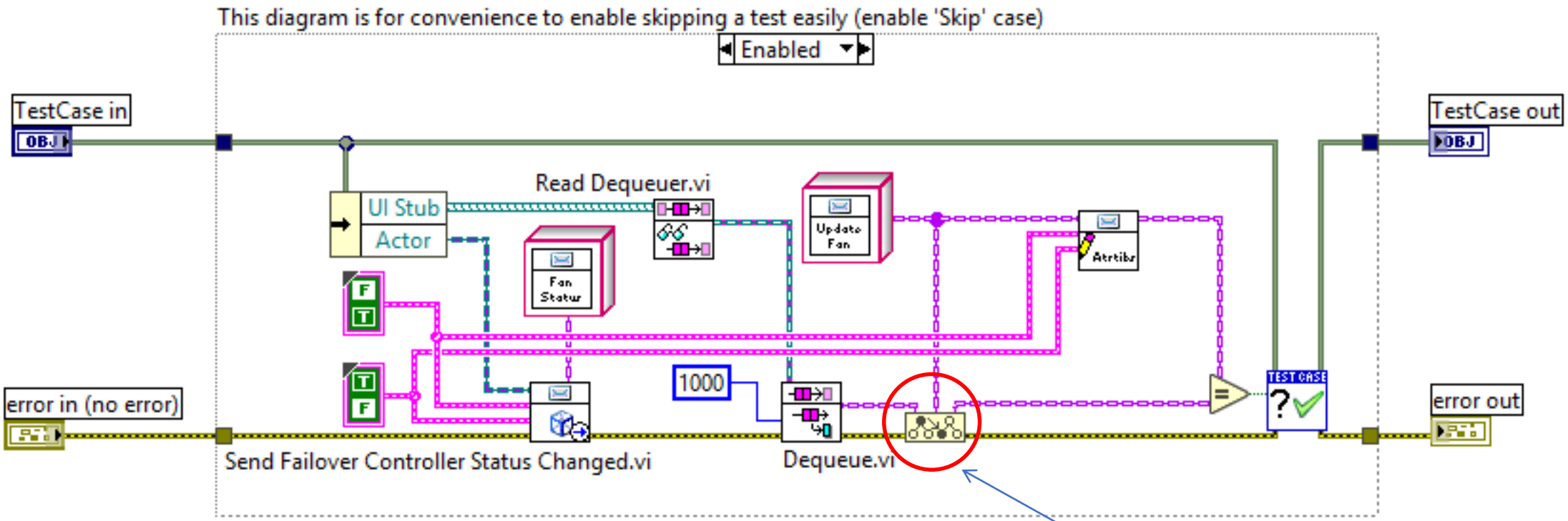

Lets you inspect return values!

JUSTACS.COM

Tip: Write Accessors on Messages

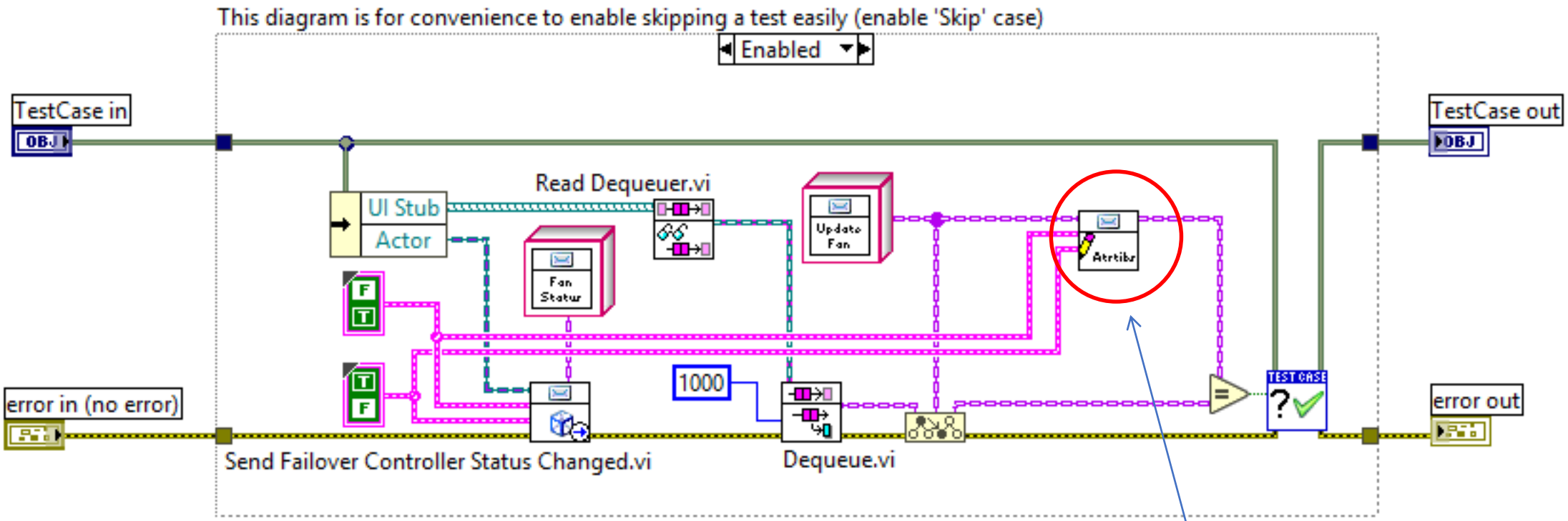

Necessary to set up the compare

Test Teardown

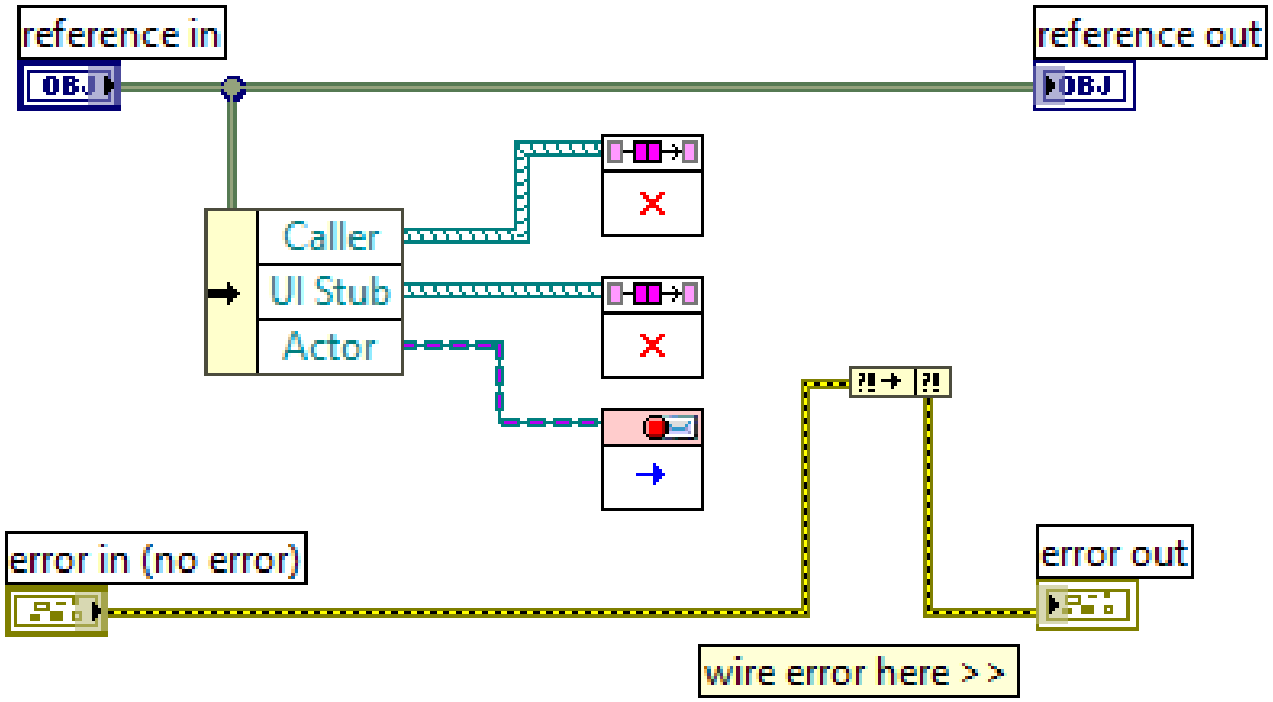

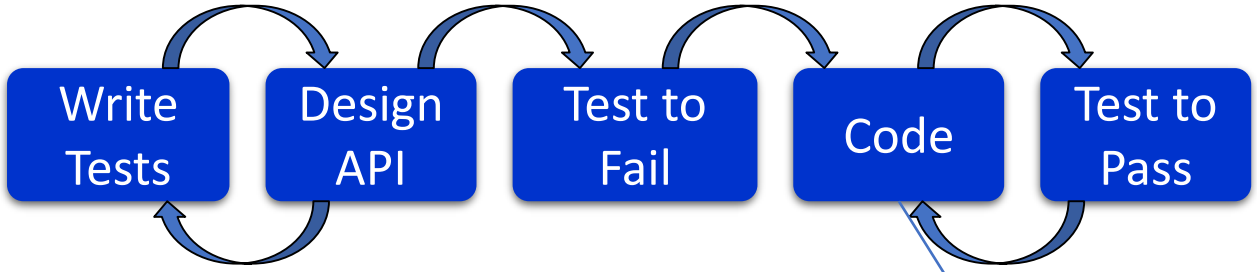

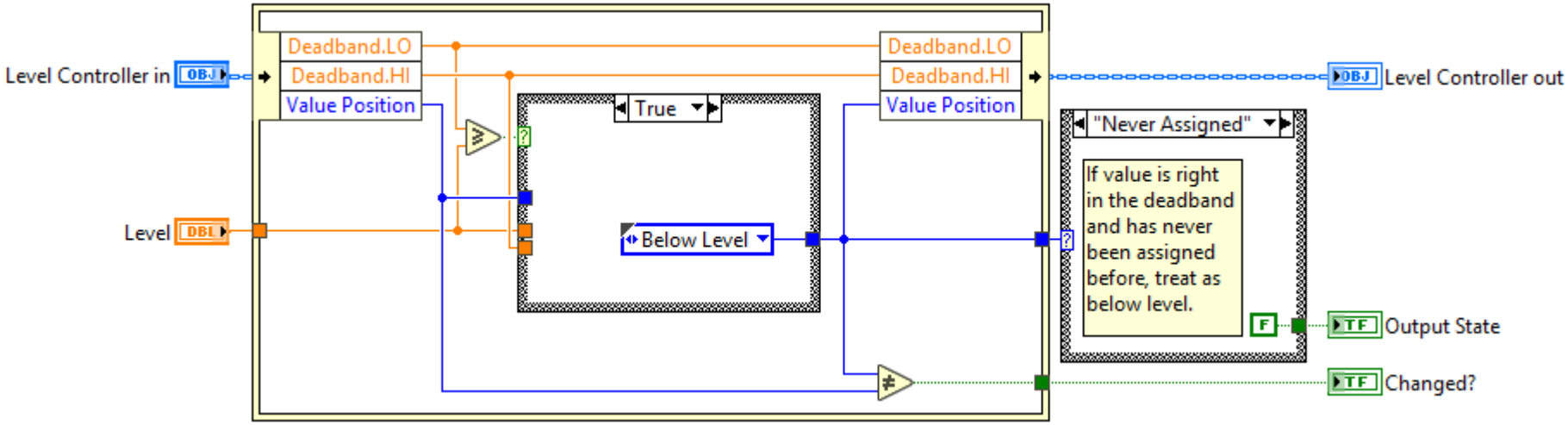

(Almost boring, in most cases)

JUSTACS.COM

A Simple Feature, Part 2

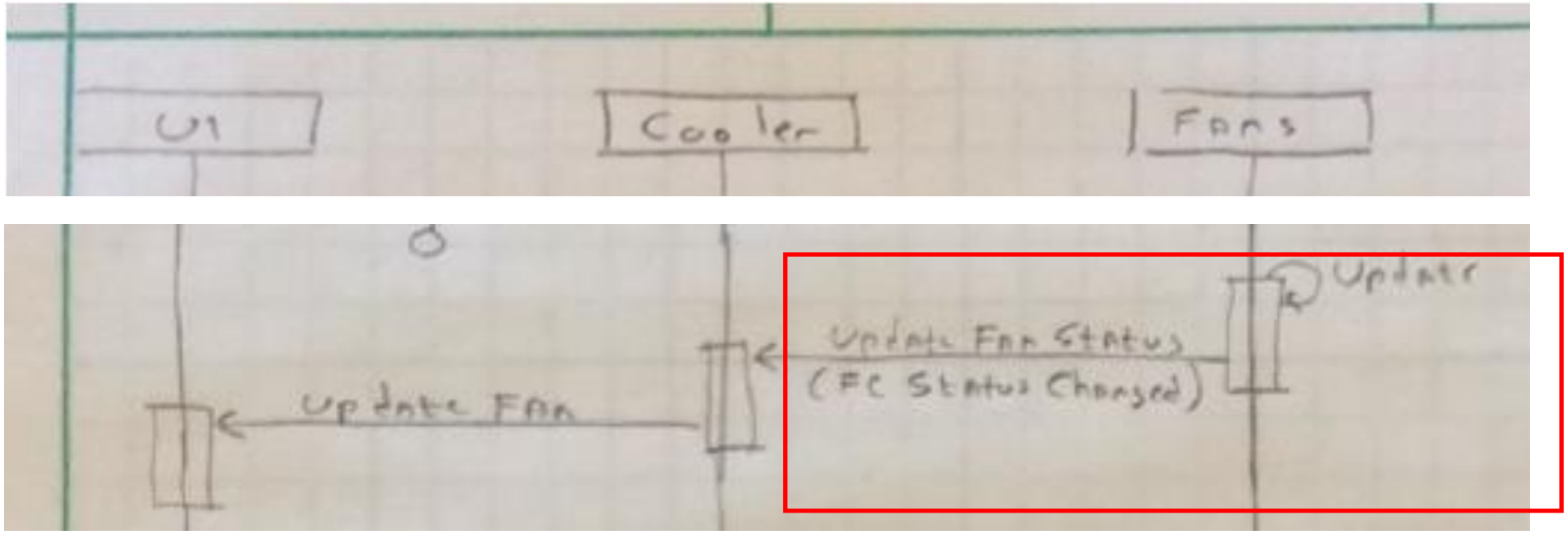

JUSTACS.COM

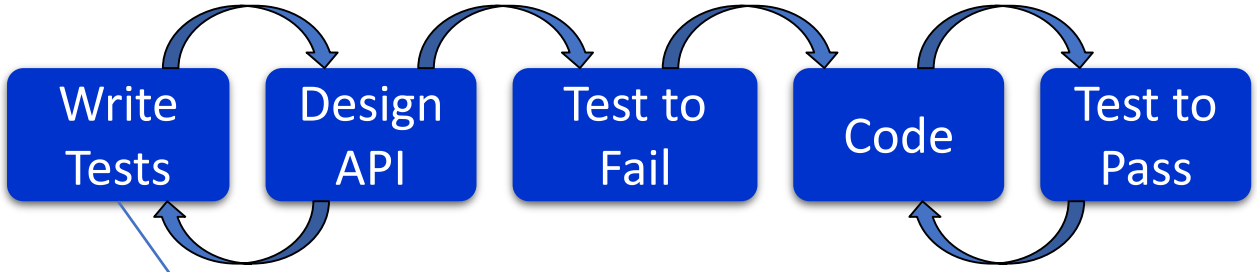
Write Tests
Design API
Test to Fail
Code
Test to Pass

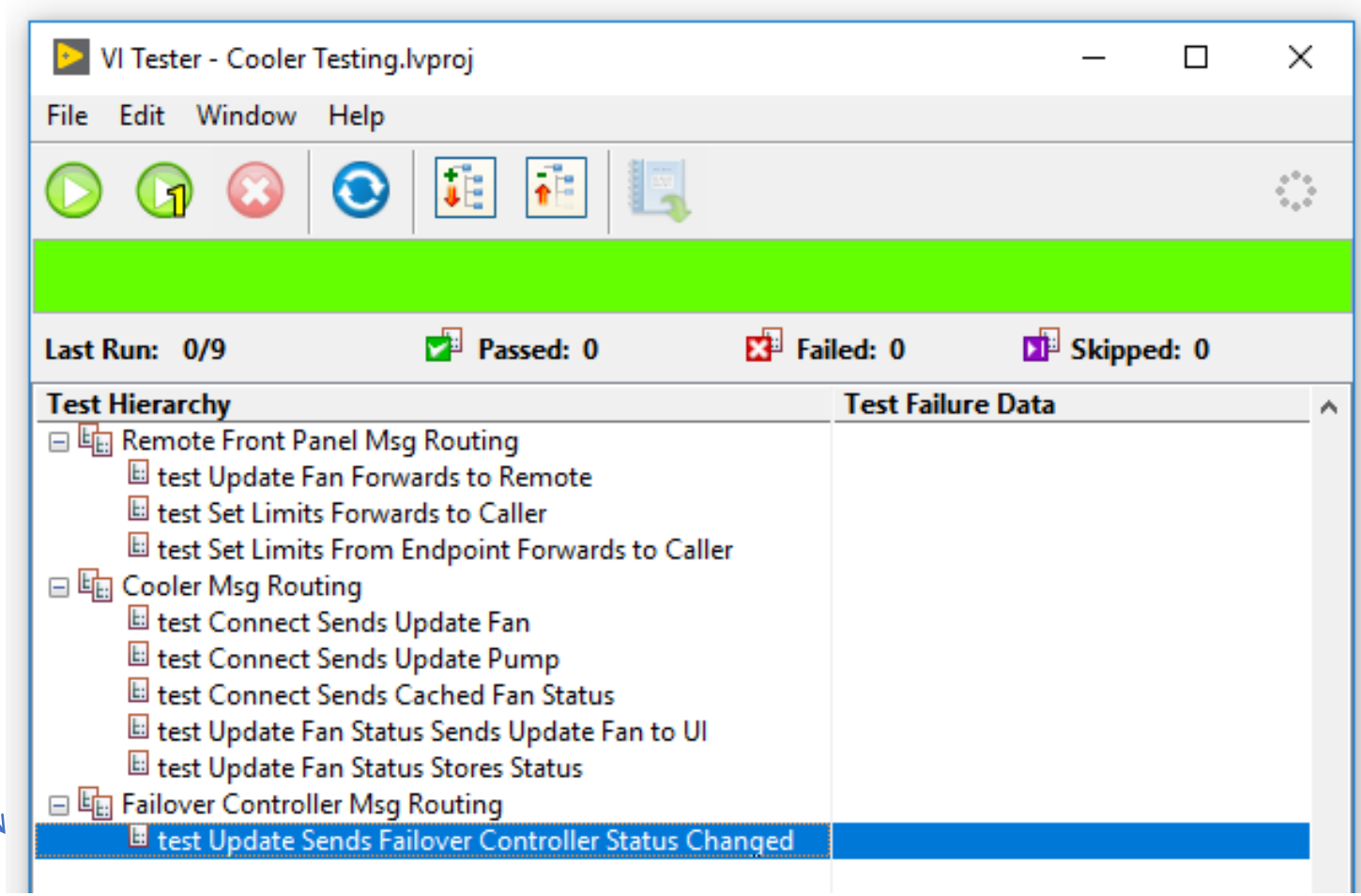
VI Tester - Cooler Testing.lvproj
File
Edit
Window
Help
Last Run: 0/9
Passed: 0
Failed: 0
Skipped: 0
Test Hierarchy
Test Failure Data
Remote Front Panel Msg Routing
test Update Fan Forwards to Remote
test Set Limits Forwards to Caller
test Set Limits From Endpoint Forwards to Caller
Cooler Msg Routing
test Connect Sends Update Fan
test Connect Sends Update Pump
test Connect Sends Cached Fan Status
test Update Fan Status Sends Update Fan to UI
test Update Fan Status Stores Status
Failover Controller Msg Routing
test Update Sends Failover Controller Status Changed

JUSTACS.COM

Receiving an Abstract Message

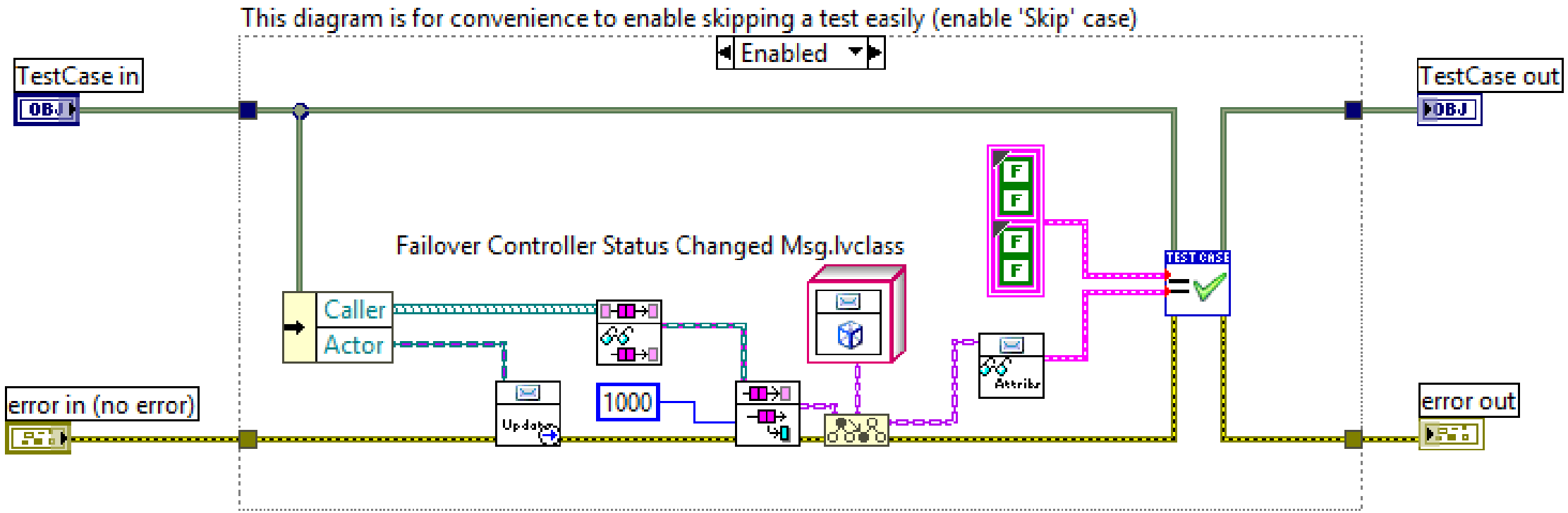

JUSTACS.COM

A Simple Feature, Part 3

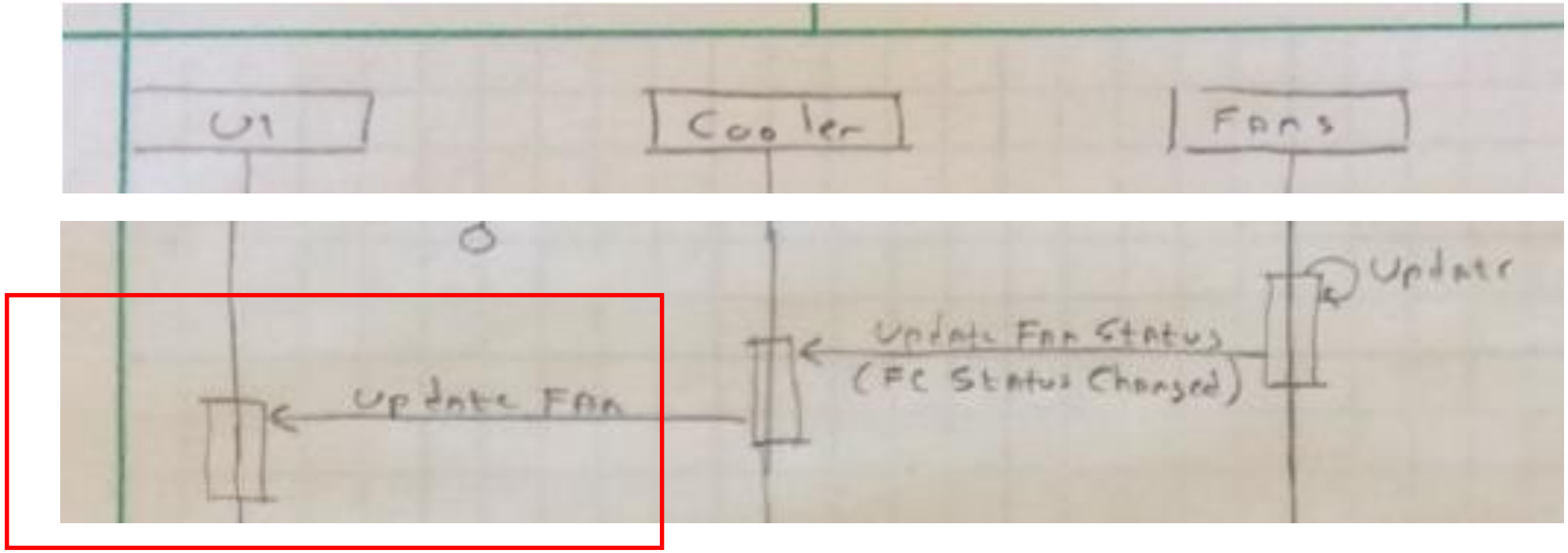

Forward message to remote

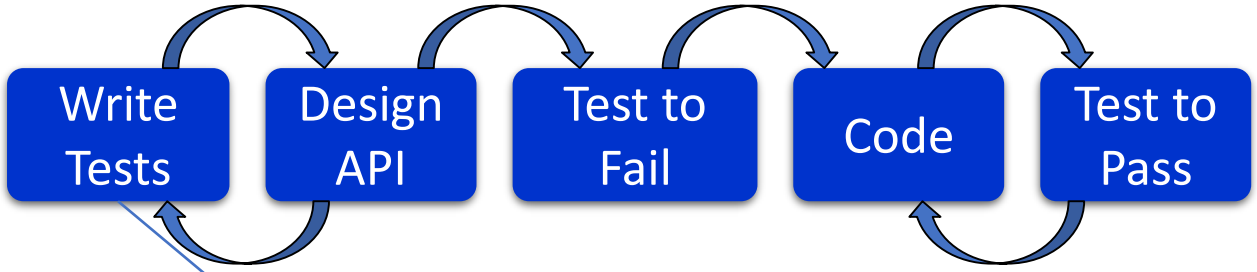
Write Tests
Design API
Test to Fail
Code
Test to Pass

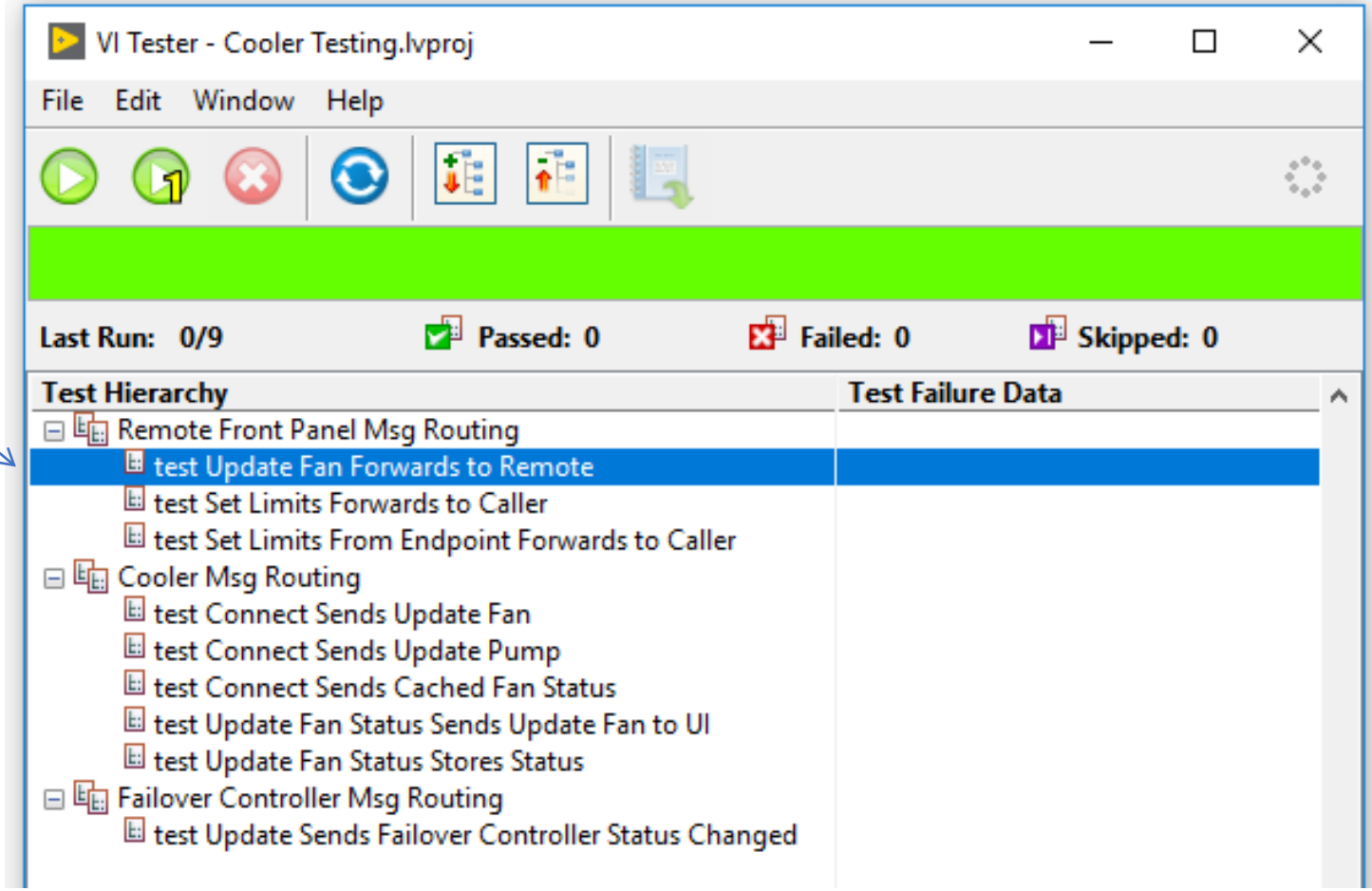
VI Tester - Cooler Testing.lvproj
File Edit Window Help
Last Run: 0/9
Passed: 0
Failed: 0
Skipped: 0
Test Hierarchy
Test Failure Data
Remote Front Panel Msg Routing
test Update Fan Forwards to Remote
test Set Limits Forwards to Caller
test Set Limits From Endpoint Forwards to Caller
Cooler Msg Routing
test Connect Sends Update Fan
test Connect Sends Update Pump
test Connect Sends Cached Fan Status
test Update Fan Status Sends Update Fan to UI
test Update Fan Status Stores Status
Failover Controller Msg Routing
test Update Sends Failover Controller Status Changed

JUSTACS.COM

System Diagram

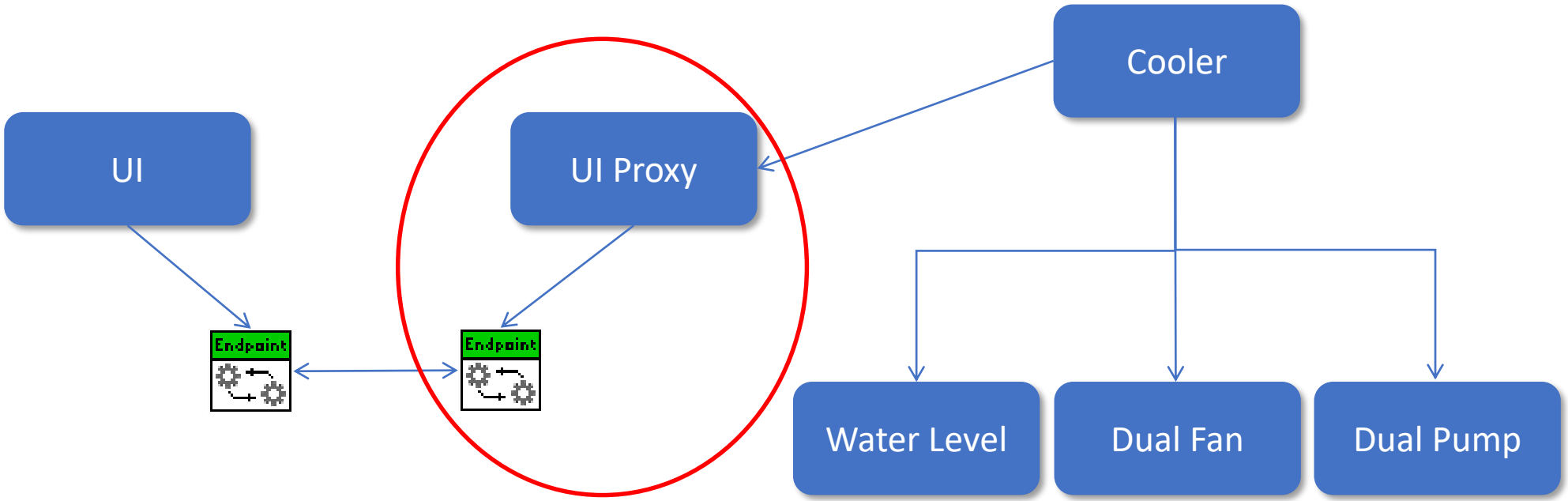

Testing Network Connectivity

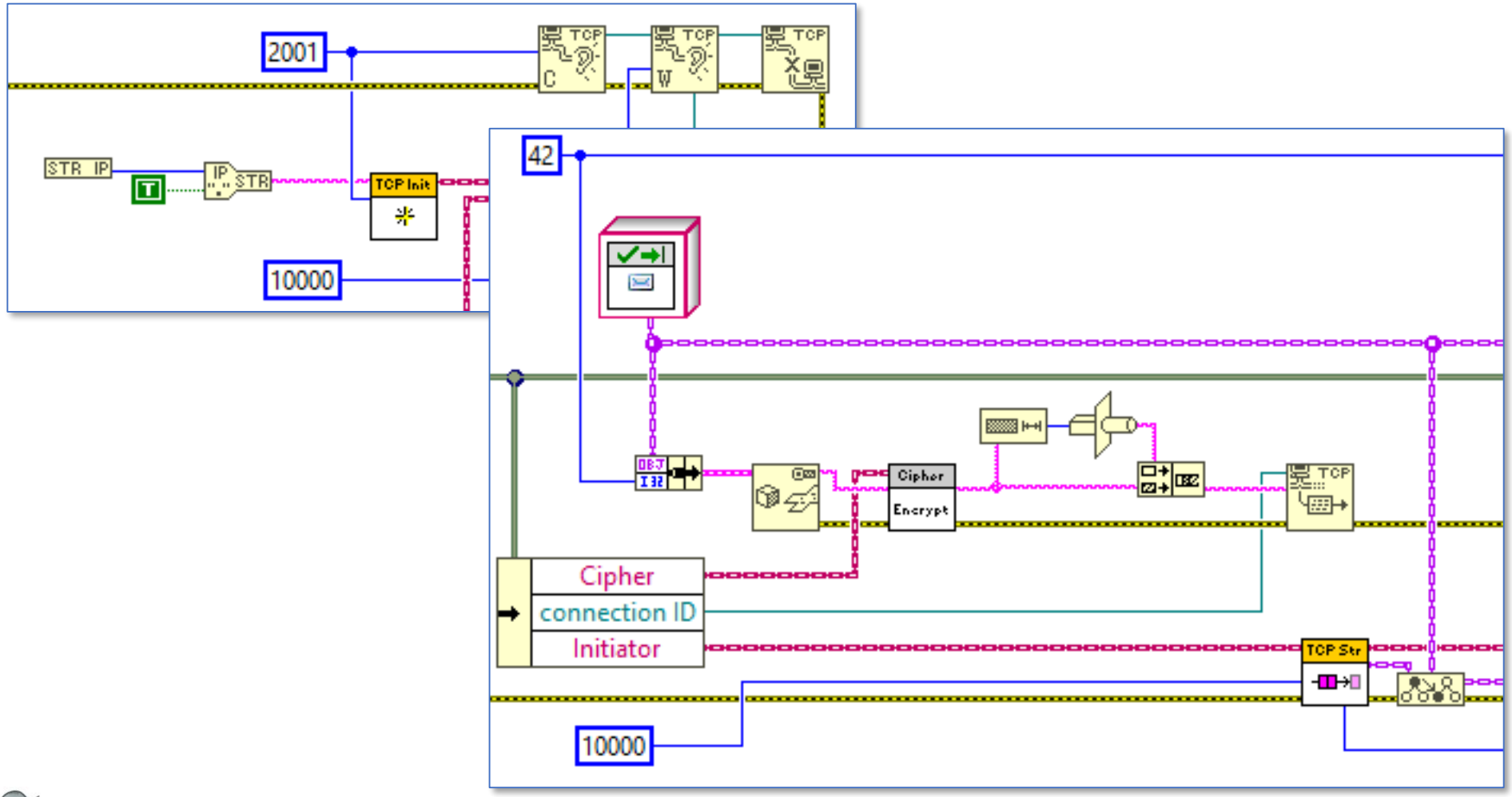

Dependency Injection

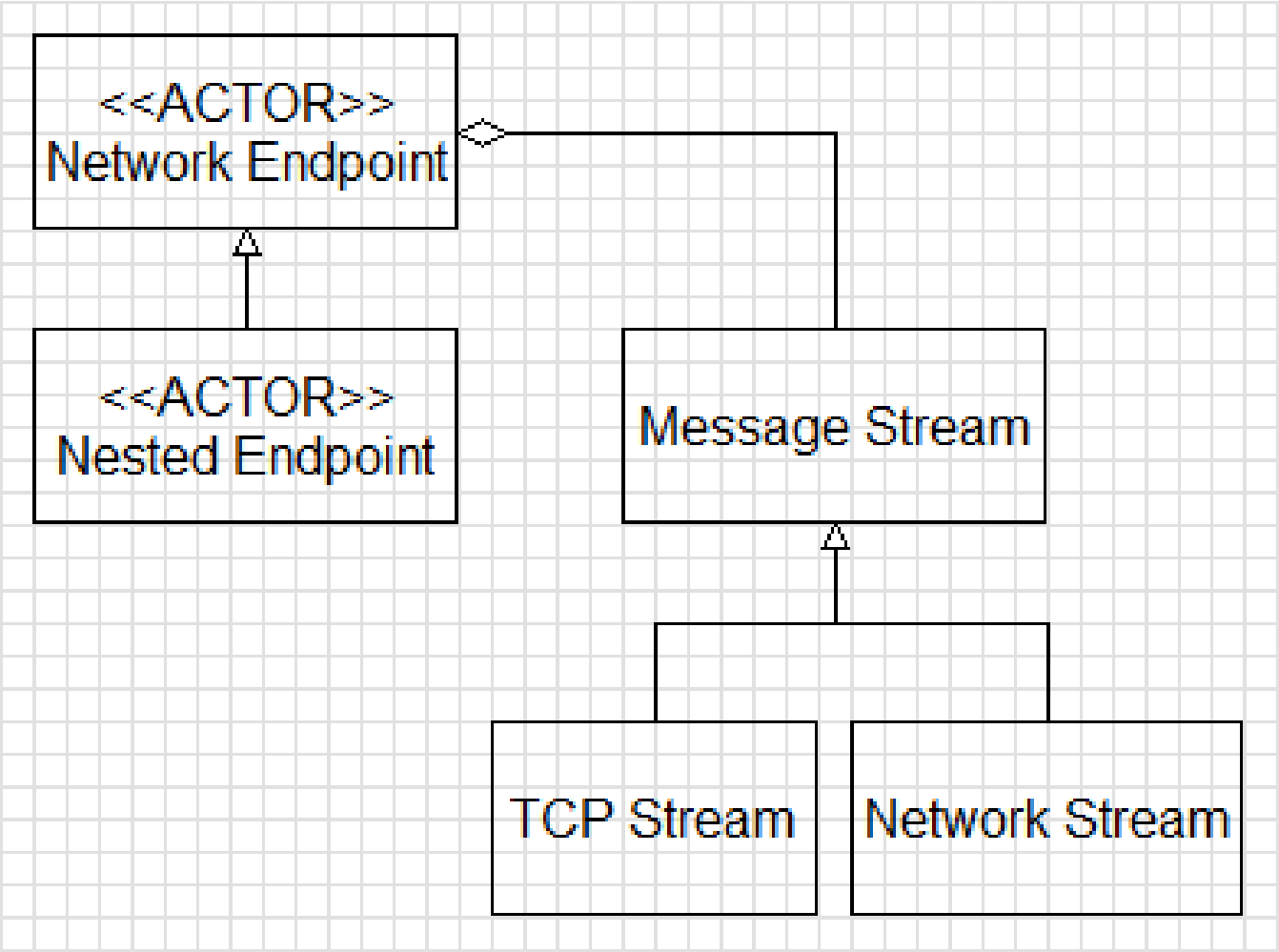

AF Queue Stream

Connect.vi

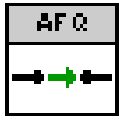

Create.vi

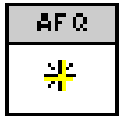

Send Message.vi

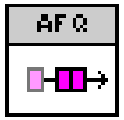

Dequeue from Send.vi

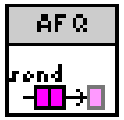

Receive Message.vi

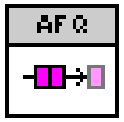

Enqueue for Receive.vi

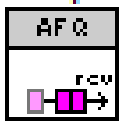

Disconnect.vi

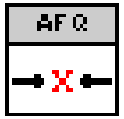

Destroy.vi

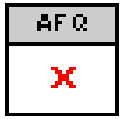

Class Overrides

Extensions for Testing

JUSTACS.COM

Test Setup

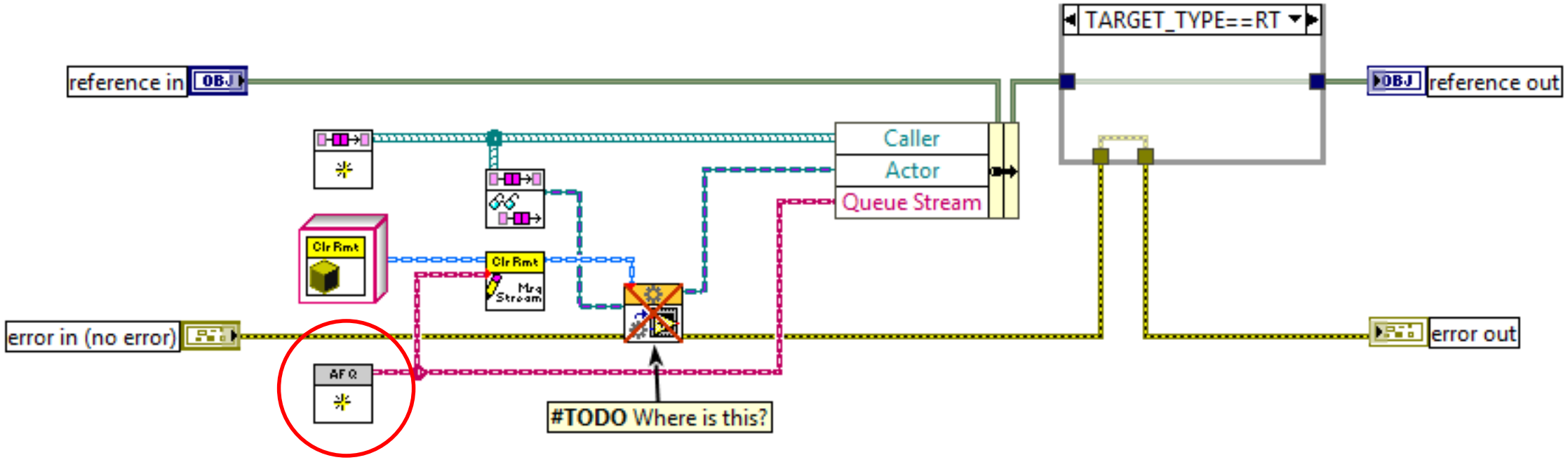
TARGET_TYPE==RT
reference in
OBJ
OBJ
reference out
Caller
Actor
Queue Stream
Clr Rmt
Clr Rmt
Msg Stream
error in (no error)
error out
AF Q
#TODO Where is this?

A Single Test

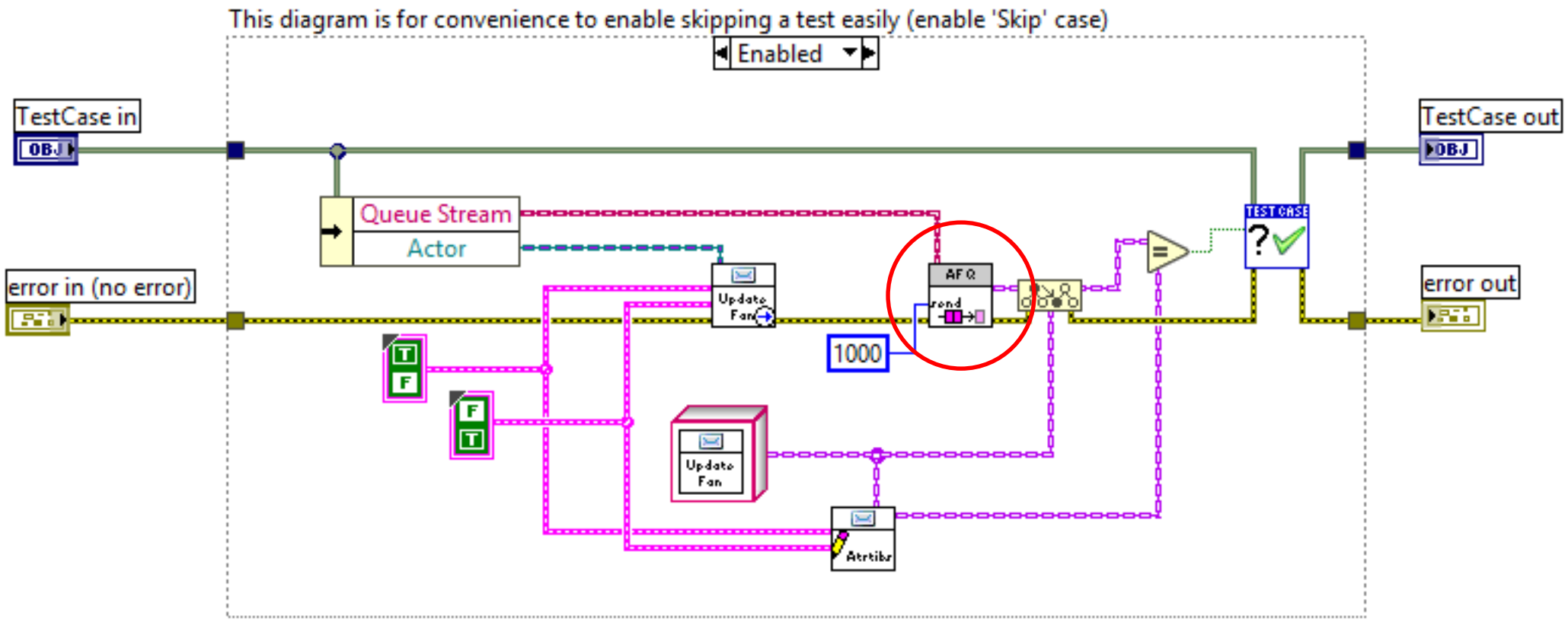

JUSTACS.COM

Tip: Business Rules Belong in Classes

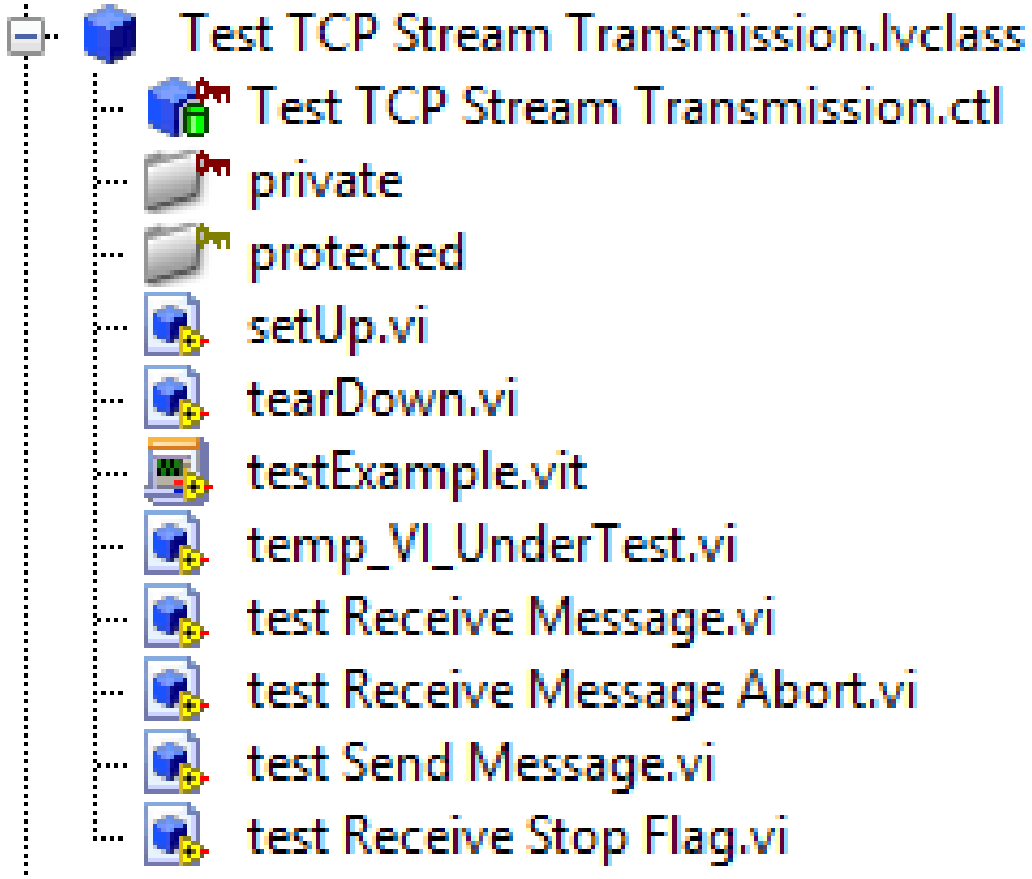

Testing is probably your most immediate and most frequently realized benefit of OO

JUSTACS.COM

Agenda

- Actor Framework – A Testing Challenge
- Isolating Actors
- Example – Testing a Simple Feature
  - Actor sends a message
  - Actor changes state
- A Cost Analysis

JUSTACS.COM

Actor Changes State

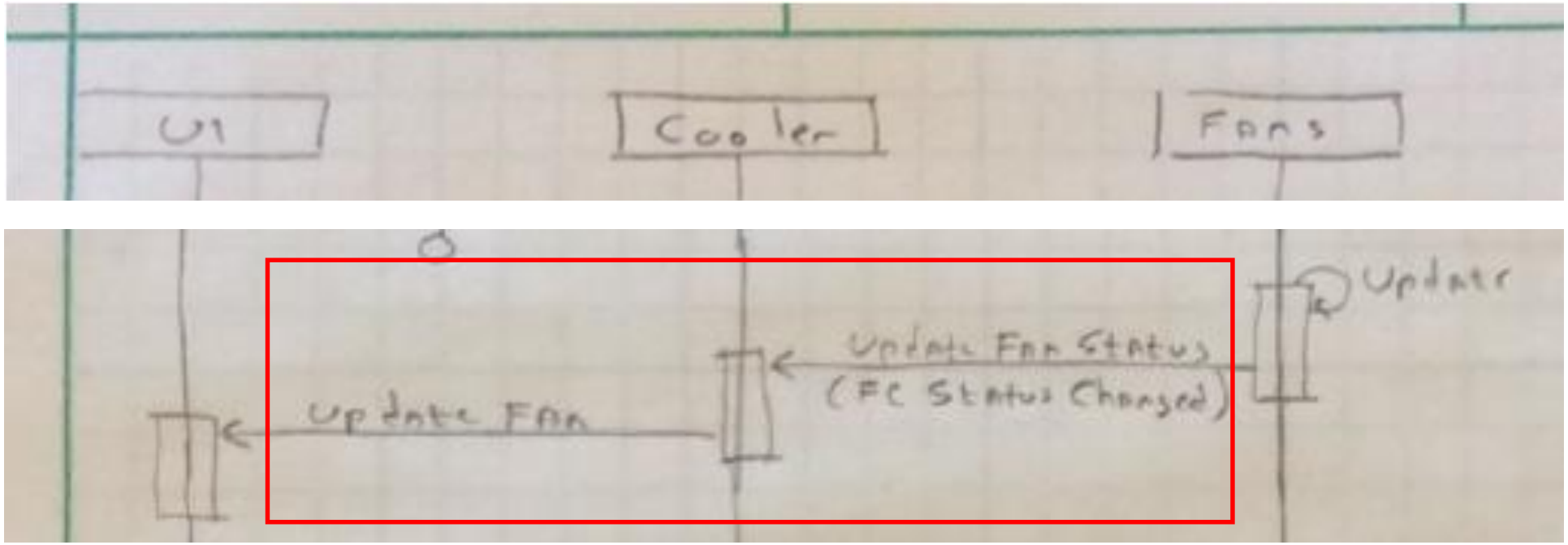

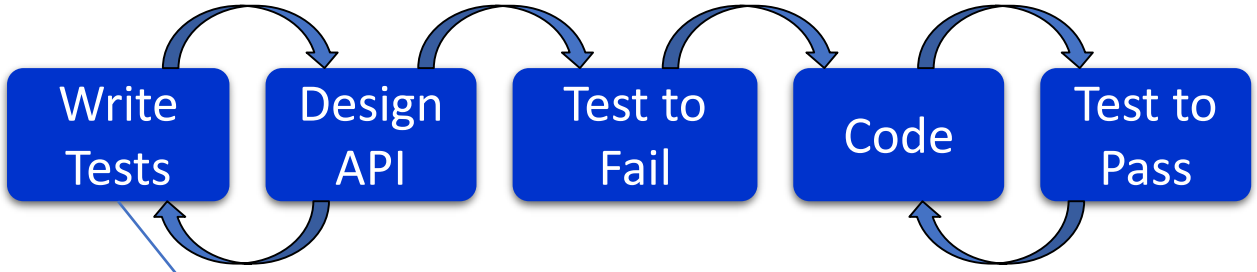
Write Tests
Design API
Test to Fail
Code
Test to Pass

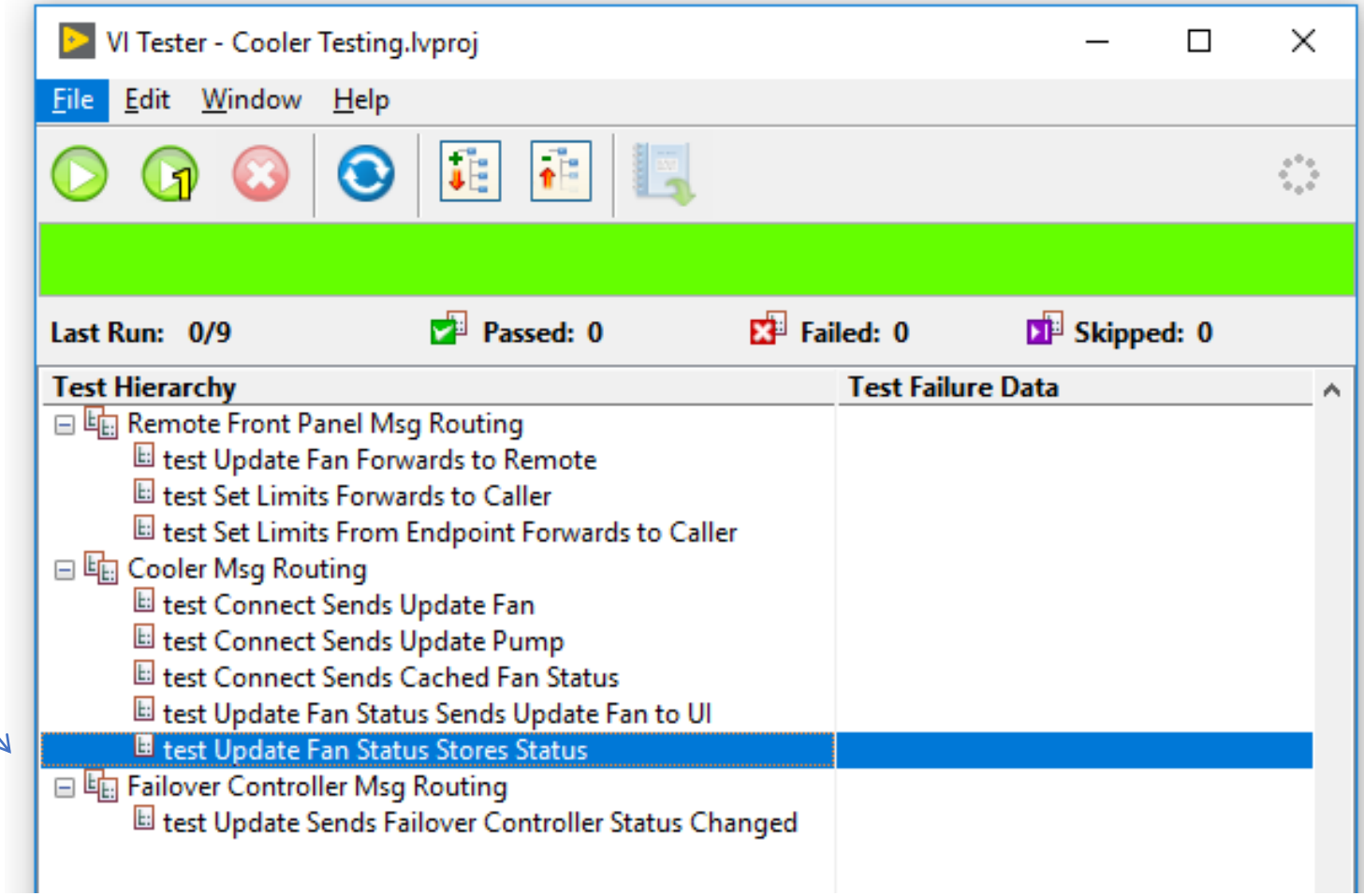
VI Tester - Cooler Testing.lvproj
File
Edit
Window
Help
Last Run: 0/9
Passed: 0
Failed: 0
Skipped: 0
Test Hierarchy
Test Failure Data
Remote Front Panel Msg Routing
test Update Fan Forwards to Remote
test Set Limits Forwards to Caller
test Set Limits From Endpoint Forwards to Caller
Cooler Msg Routing
test Connect Sends Update Fan
test Connect Sends Update Pump
test Connect Sends Cached Fan Status
test Update Fan Status Sends Update Fan to UI
test Update Fan Status Stores Status
Failover Controller Msg Routing
test Update Sends Failover Controller Status Changed

JUSTACS.COM

Testing Internal State

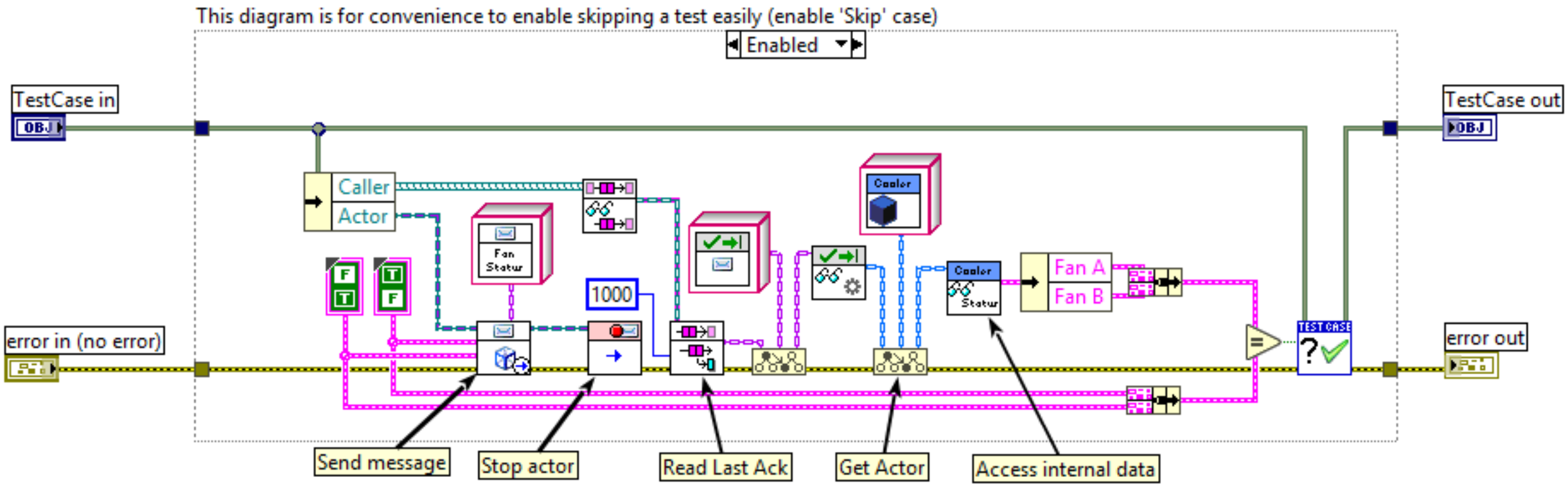

JUSTACS.COM

Agenda

- Actor Framework – A Testing Challenge
- Isolating Actors
- Example – Testing a Simple Feature
  - Actor sends a message
  - Actor changes state
- A Cost Analysis

JUSTACS.COM

How Much Time Does it Cost?

- Activities associated with Test Driven Development:

- Writing a specification (sequence diagrams, etc.)
- Writing APIs for actor features
  - Tested actor's method and message
  - Receiver's method and message
- Coding the unit test
- Filling in the actor methods (tested actor)

JUSTACS.COM

How Much Time Does It Save?

- Regression testing becomes trivial
- Bugs not discovered until integration:

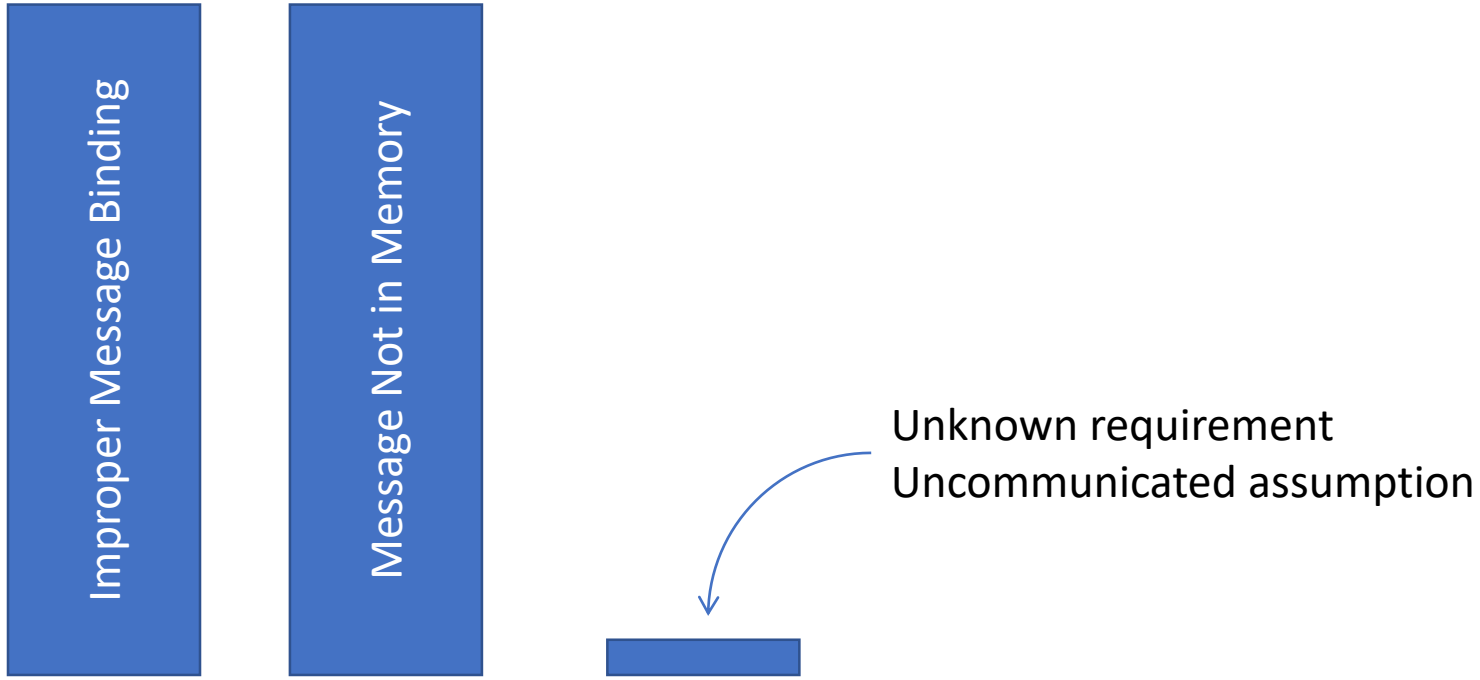

Closing Thought - Design Implications

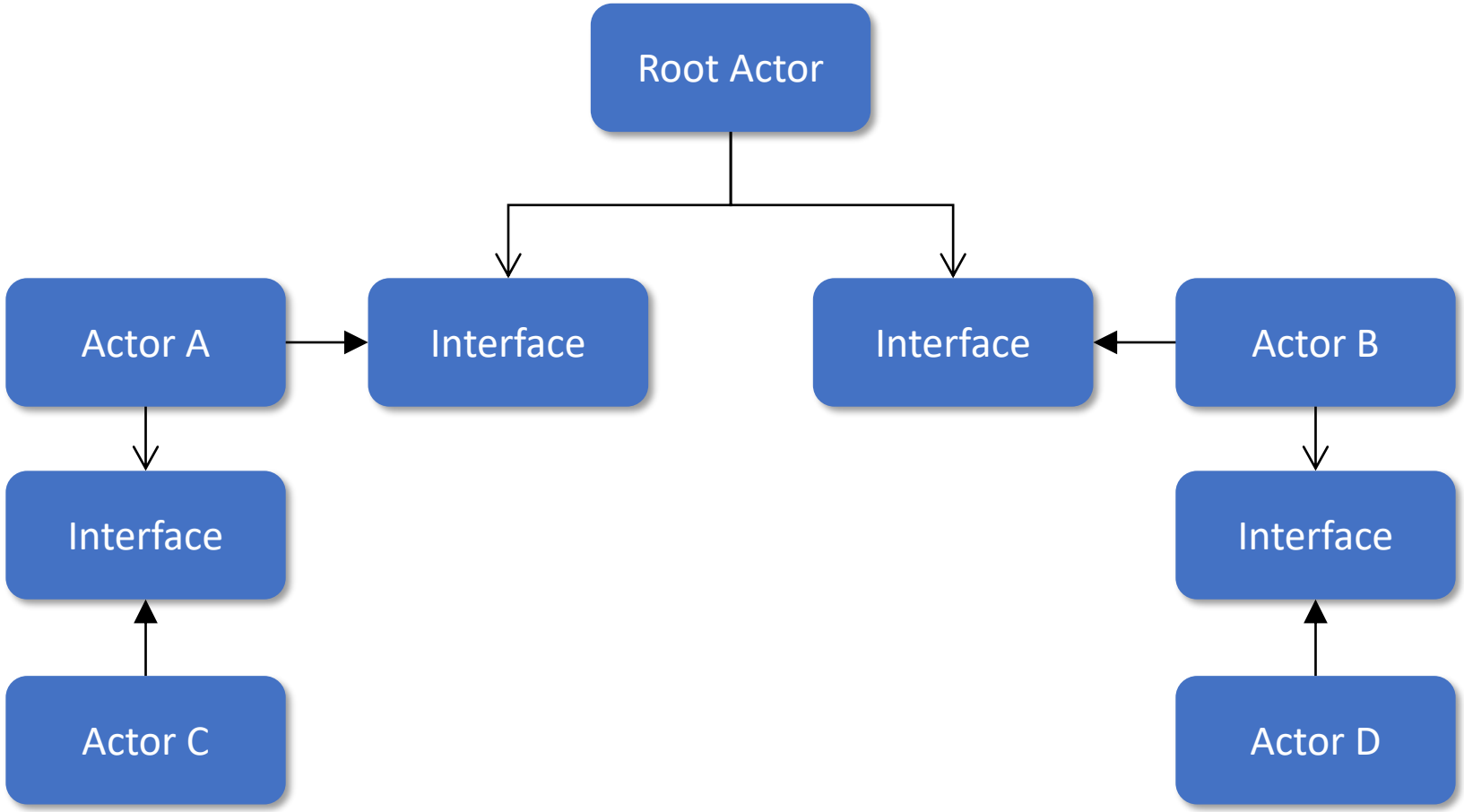

Closing Thought - Design Implications

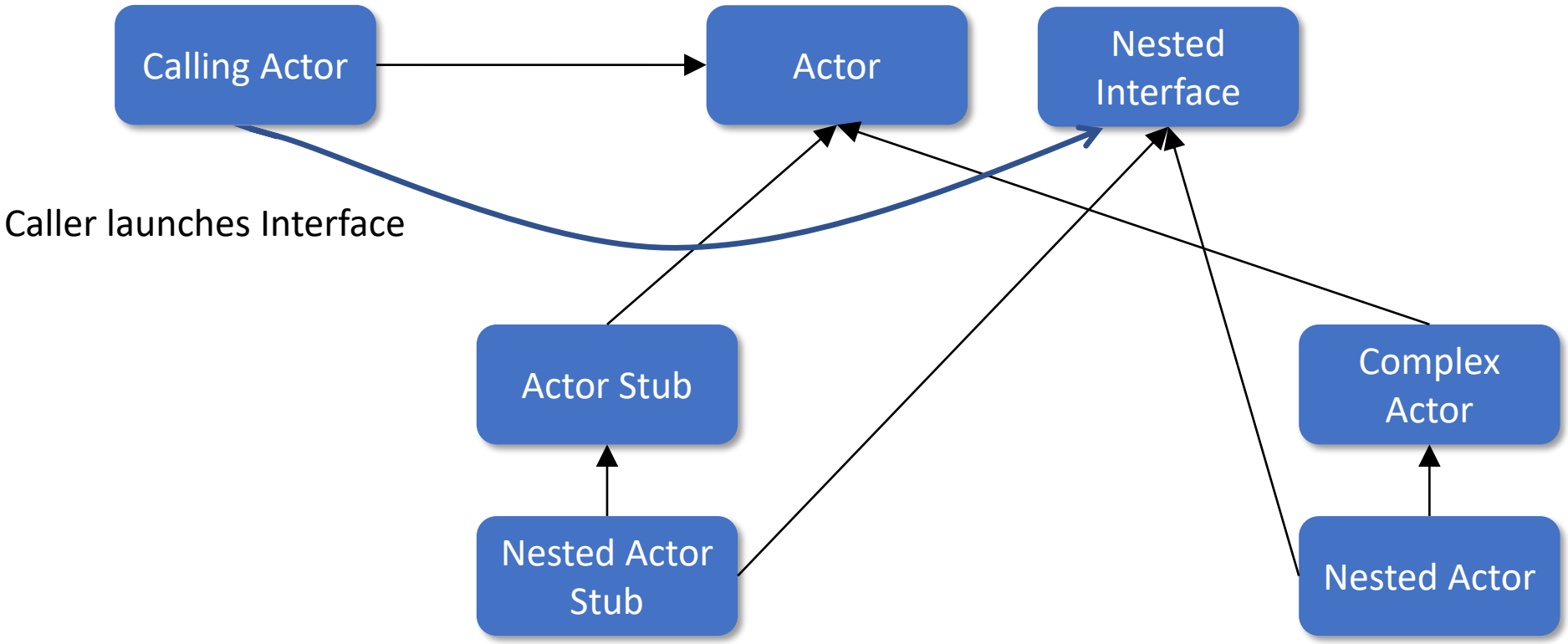

JUSTACS.COM

Questions?

Follow me!

- LinkedIn:
  - Linkedin.com/in/allencsmith
- NI Forums:
  - justACS
- Vimeo.com/channels/ReadyOnTheWire